AURA Sauna Heater Manual

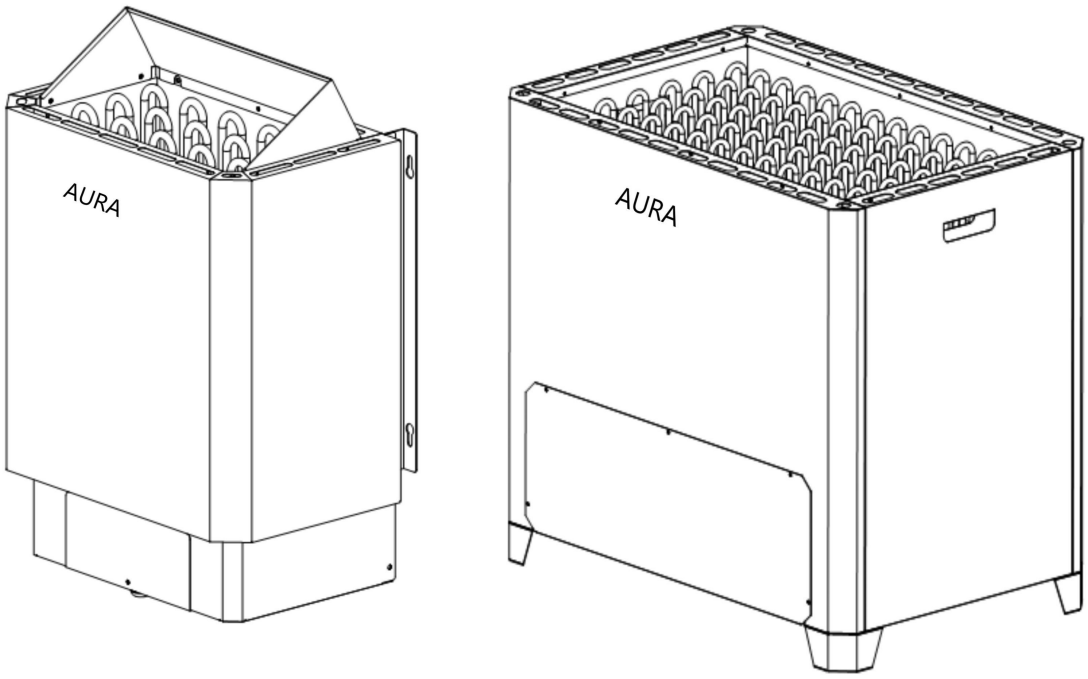

Please read the manual carefully before installation.

All electrical wiring to be installed by a qualified licensed electrician in accordance with National Electrical Code and local electrical code

NOTICE Pictures/drawings for illustrative purposes only

Table of Contents

1. Introduction 1
2. Safety Warning 1
3. Parameters And Dimensions 2
4. Installation 4
    4.1. Installation of sauna heater 4
    4.2. Installations of control system & temp. Sensor 7
        4.2.1Installing the central box 7
        4.2.2Installing the controller 7
        4.2.3 Installing the temp.sensor 8
    4.3. Circuit installation and diagram 9
5. Functions And Operation 10
6. Sauna Stone Arrangement 13
7. Sauna Room Ventilation 13
8. Sauna Room Insulation 14
9. Warranty And Services 15

1. Introduction

Thank you for choosing AURA sauna heater with well-designed structure, steady performance, and convenient installation. Sauna-bathing kit is mainly composed of the heater and sauna room. After Sauna-bathing, people feel the flow of the spirits, excrete virus in body, eliminate fatigue, release the muscle and good for health.

2. Safety Warning

- It is forbidden to use the sauna heater for any other purposes.
- The heater gets extremely hot during operation and should not be touched otherwise burns may result.
- Children should be adequately supervised.
- Elderly persons, pregnant women, as well as those people who are suffering from heart disease, high blood pressure, diabetes or people not in good health, please seek medical opinions before using the sauna room.
- This appliance is not intended for use by person (including children) with reduced physical, sensory, or mental capabilities, or lack of experience and knowledge, unless they have been given supervision or instruction concerning use of the appliance by a person responsible for their safety.
- Do not smoke in the sauna room.
- Do not use the sauna room when under the influence of alcohol.
- Do not use the sauna room immediately after strenuous exercise.
- Leave the sauna room at once if you feel sleepy, sick or uncomfortable.
- Ensure there is good ventilation for the sauna room.
- **When you go out, or may not use sauna heater in long time, please DISCONNECT the general power supply to sauna heater.**

 **Commercial operators should post a notice of these precautions in a prominent position near sauna room.**

NOTICE Pictures/drawings for illustrative purposes only

3. Parameters And Dimensions

(Only apply to European style voltage and phase)

Model	Power	Heating element	Phase /Live wire	Voltage / Current	Sauna room m3	Size of wire	Stones Arrange
	KW	N*KW		V/A	MAX	N*mm2	Max.KG
AURA-45	4.5	3*1.5	1(2L)	215-240/20.5	6	3*6.0	18
			1(2L)	380-415/6.8		5*1.5	
AURA-60	6.0	3*2	1(2L)	215-240/27.3	9	3*10.0	18
			1(2L)	380-415/9.1		5*1.5	
AURA-90	9.0	3*3	1(2L)	215-240/ 40.9	13	3*10.0	20
			1(2L)	380-415/ 13.6		5*2.5	
AURA-120	12.0	6*2.0	1(2L)	380-415/ 18.3	18	5*4.0	50
AURA-150	15.0	3*2.0+ 3*3.0	1(2L)	380-415/ 22.8	23	5*4.0	75
AURA-180	18.0	6*3.0	1(2L)	380-415/ 27.4	27	5*6.0	100

Notes: Above room volume is subject to sauna room with heat preservation.

Table 1

NOTICE Pictures/drawings for illustrative purposes only

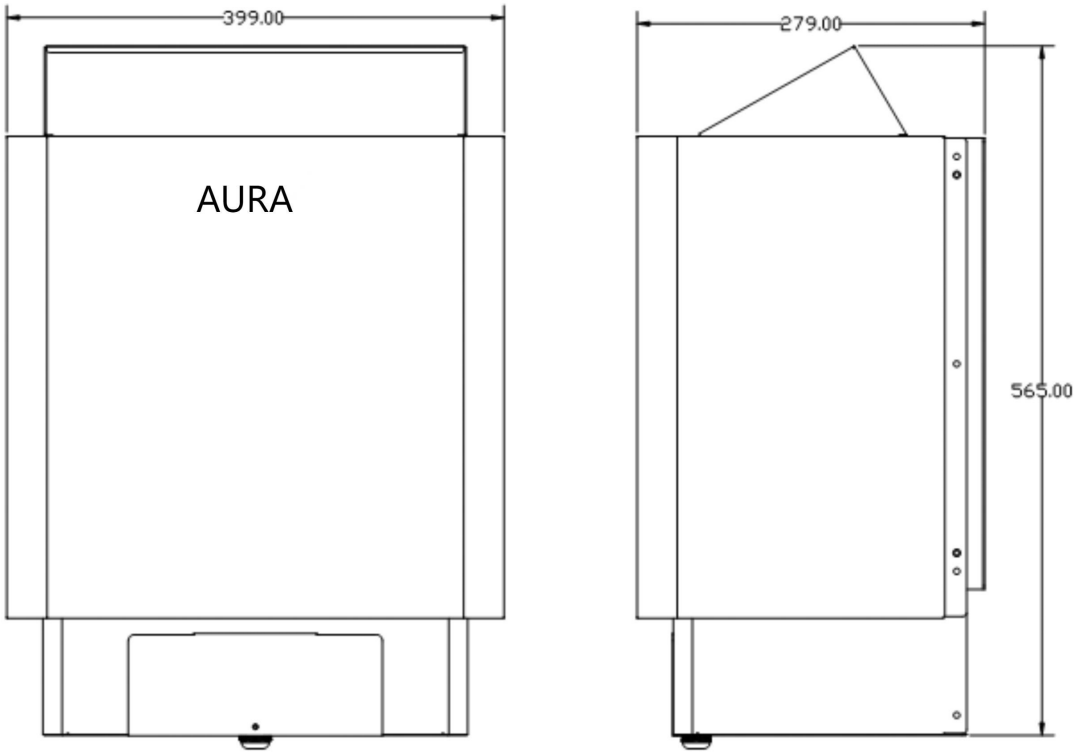

Figure 1. 4.5-9KW Sauna Heater Size

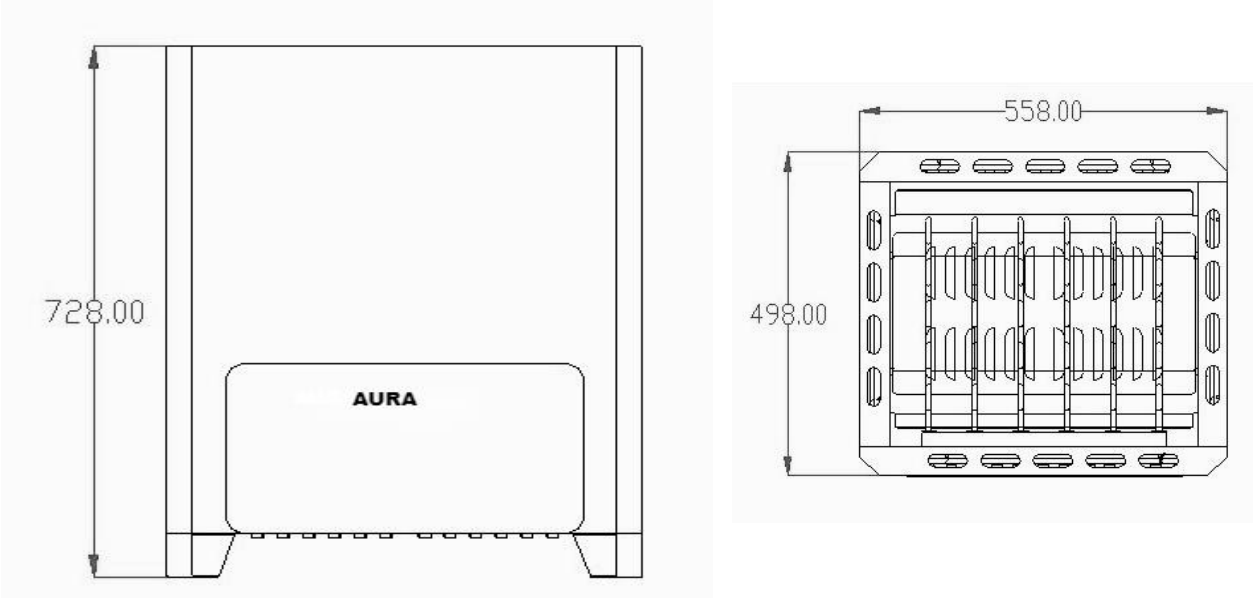

Figure 2. 12-18KW Sauna Heater Size

NOTICE Pictures/drawings for illustrative purposes only

4. Installation

4.1. Installation of sauna heater

Attentions:

- All circuits should be installed by licensed electricians and conform to local and national codes. Improper electrical connection can cause fire or electric shock.
- Power supply must be cut off before installation, maintenance, or repair. Press the on/ off button on the controller can NOT cut off the supply power.
- Check if the sauna heater power and model is suitable for your room. (Ref to table 1). Room volume in table 1 is subject to sauna room with heat preservation, if your room are without heat preservation, please consult your dealer for suitable power and model.
- A Residual Current Device (RCD) must be installed in the power supply circuit for safety purpose.
- The location of the heater should fulfil the minimum requirements concerning the distances given in table 1 and figure 3.
- The required minimum height of sauna room is 1900mm.
- Choose the cable wire according to table 1 and the cable wire need to be able to bear extremely high temperature 170℃ (It is recommended to use rubber cable wire).
- Do not install more than one heater in a sauna room, if must need to install two heaters in one room, minimum distance 400mm should be guaranteed between two heaters when installing.
- The heater gets very hot when working, to avoid the risk of accidental contact with the heater, it is recommended that a heater guard to be provided. The guard could be made into many kinds of patterns in accordance with the location place, but some size must be made as table 1 and figure 3.
- To prolong the life of your sauna you can use a heat proof board behind and above the heater to prevent charring, for commercial cases this should be more seriously considered.
- The small sauna heater (4.5-9KW) supporting screws must be fixed tightly, and leave 3 mm between screw head and the wall so that the sauna heater could be wall mounted. **(See figure 2A &2B&2C)**

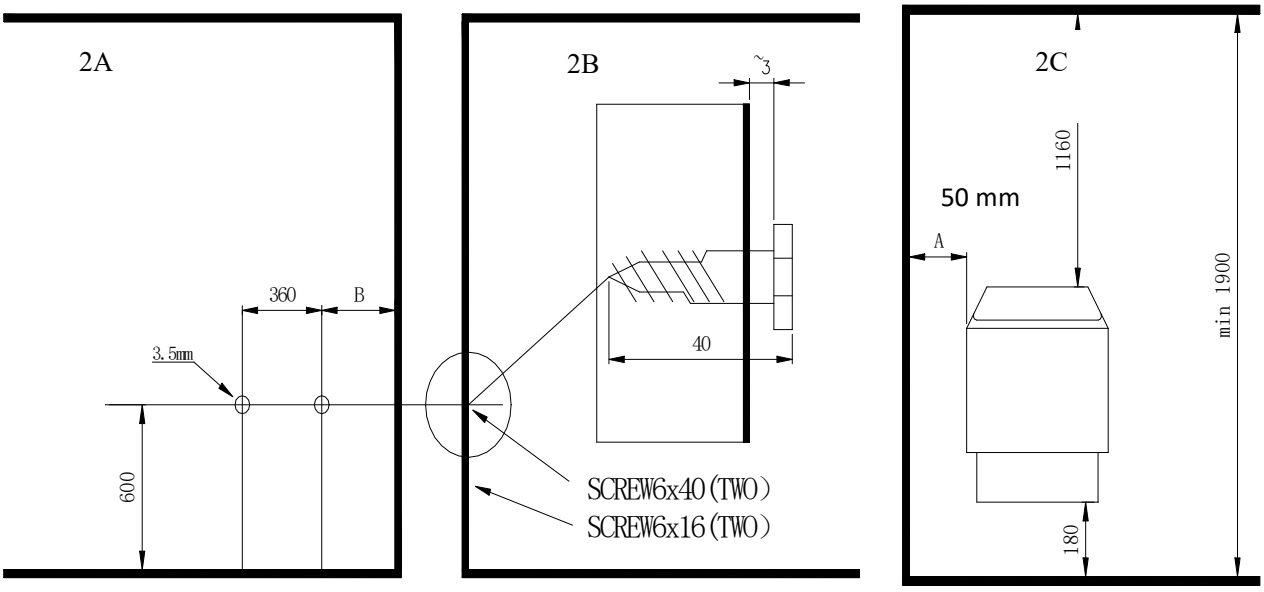

NOTICE Pictures/drawings for illustrative purposes only

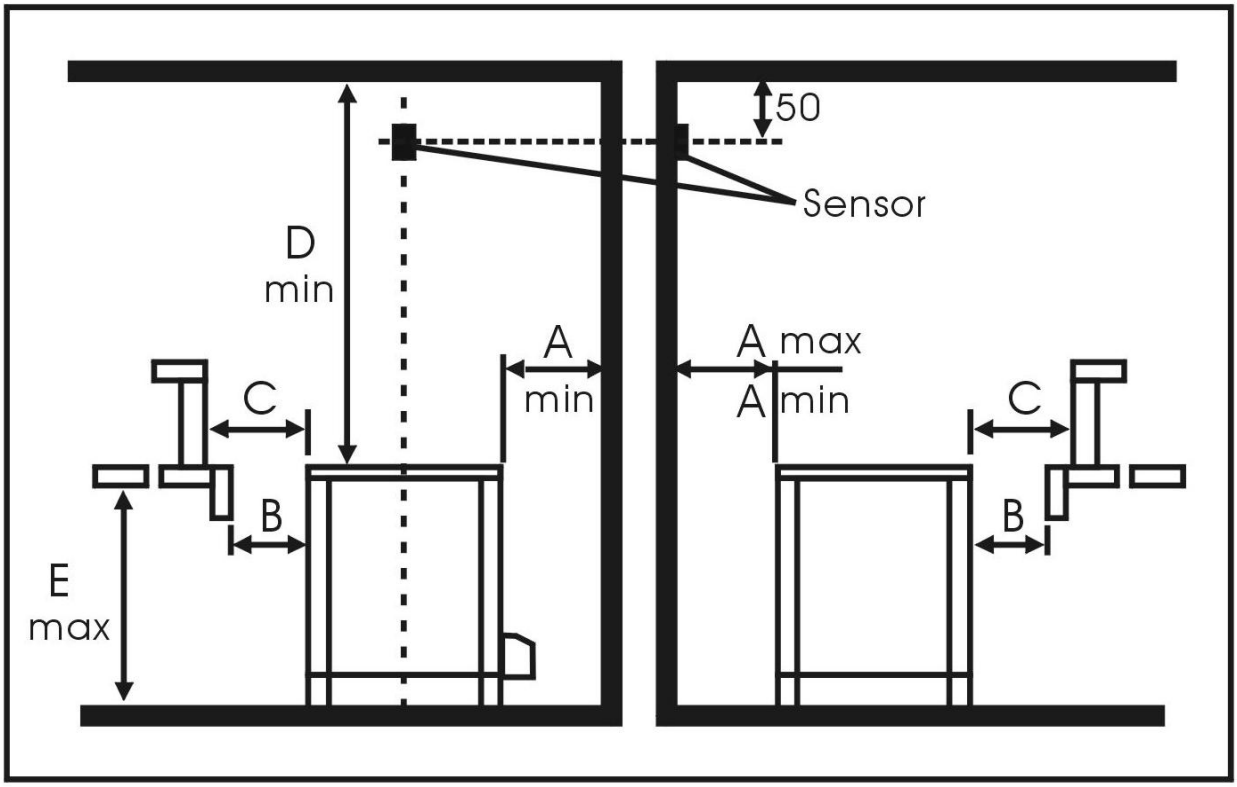

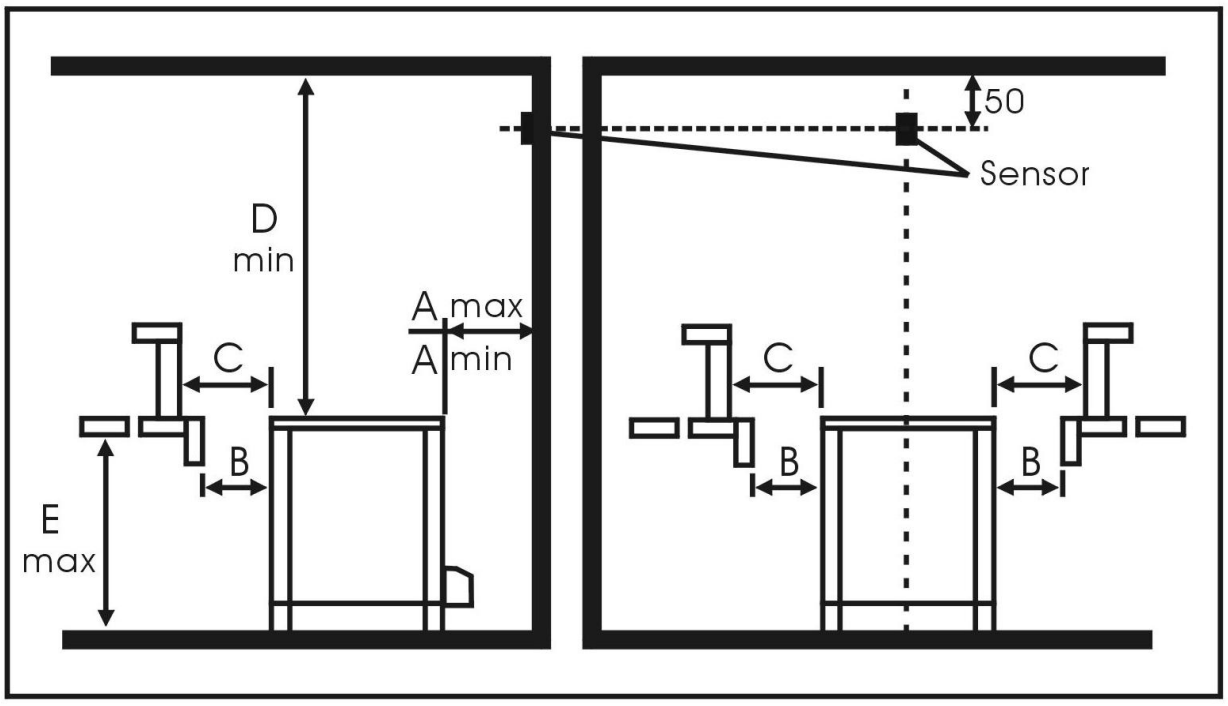

NOTICE Pictures/drawings for illustrative purposes only

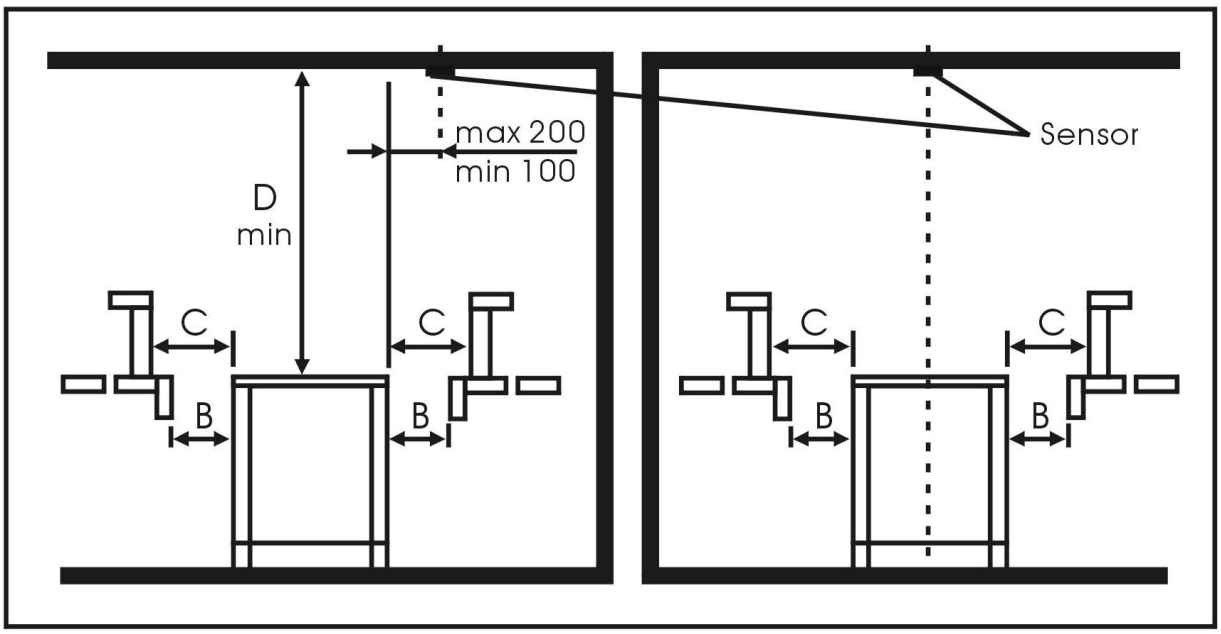

Figure 3 . The location of heater

Model	Safety distance					
	A min	A max	B min	C min	D min	E max
	mm	mm	mm	mm	mm	mm
AURA-120	120	220	150	200	1400	680
AURA-150	160	260	150	200	1400	680
AURA-180	160	260	150	200	1400	680

Table 2 Safety distance

NOTICE Pictures/drawings for illustrative purposes only

4.2. Installations of control system & temp. Sensor

4.2.1Installing the central box

Central control box size	Screws distance
260*210*80mm (For 4.5KW to 9KW sauna heater)	178mm 
310*230*80mm (For 12KW to 18KW sauna heater)	232mm 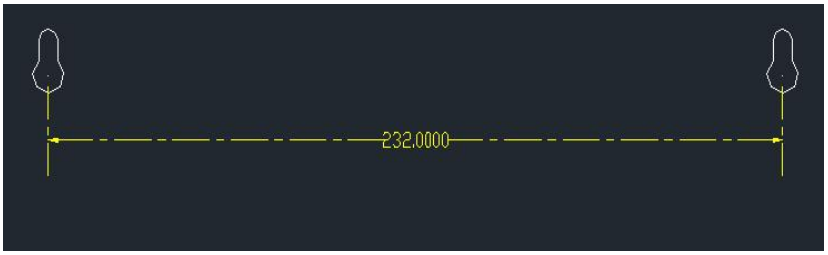

4.2.2Installing the controller

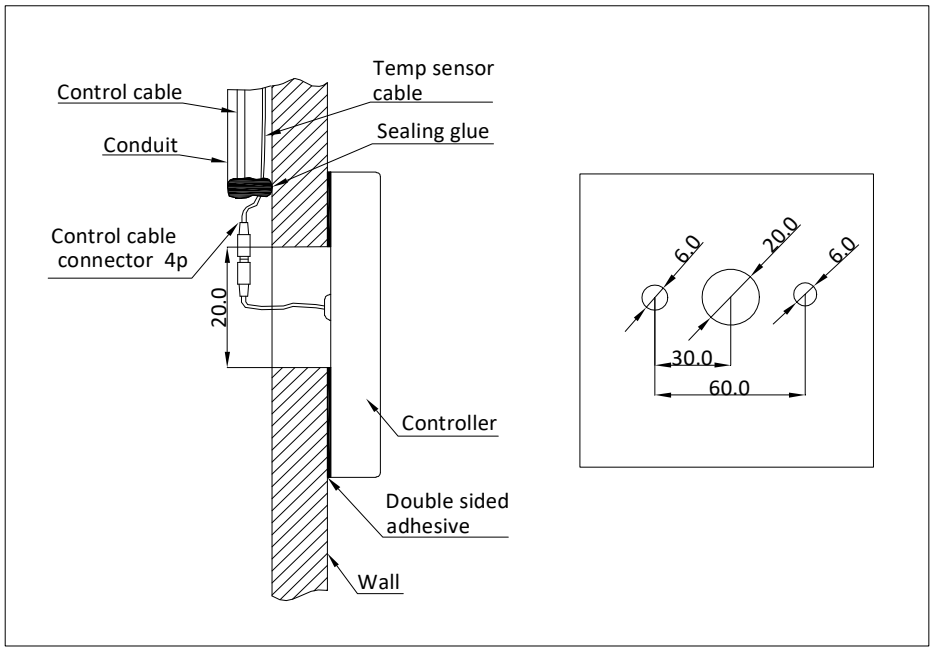

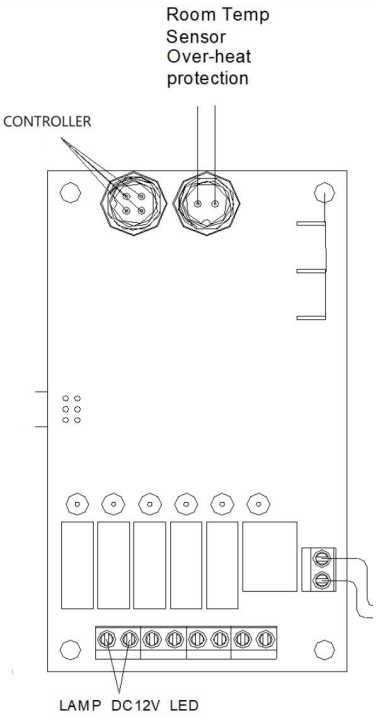

NOTICE Pictures/drawings for illustrative purposes only

The controller should be installed at a height of approximately 1.2m from the ground, OUTSIDE the sauna room but indoors, nearby the sauna room or another place where easy to operate.

Route the control cable through the conduit (ϕ25mm), with one end connecting to the controller and the other end connecting to the 4-pin aviation plug on the main board. You can see the main board after removing the cover of central control box.

4.2.3 Installing the temp.sensor

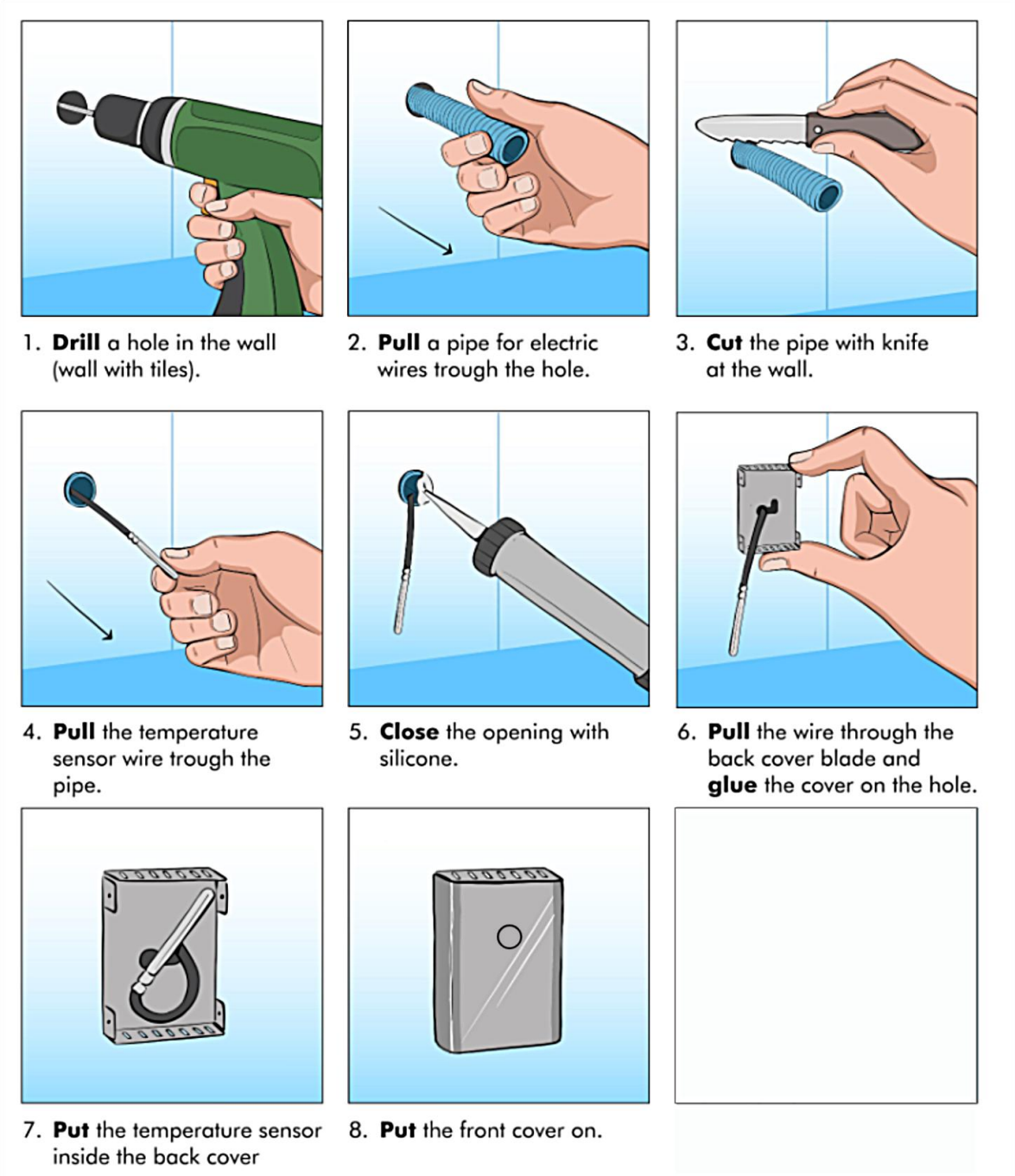

There's an over-heat protector on the temperature sensor box.

NOTICE Pictures/drawings for illustrative purposes only

Attention: Temperature sensor should be installed in sauna room but not directly above sauna heater, the height must be a minimum of 1800mm from floor. The horizontal distance to sauna heater must exceed 500mm, refer to Figure 3.

Route the temperature sensor cable through the conduit (ϕ25mm), and connect to the 2-pin aviation plug on the main board. You can see the main board after removing the cover of central control box. (Refer to last chapter).

NOTE: BOTH the Controller and Temperature sensor cables should be routed through the same hole at the side of the central control box and plugged into their respective circuit board mounted and labeled connectors. The other two holes should be used for routing AC power cables.

4.3. Circuit installation and diagram

Attention:
For external control sauna heater, power will be supplied into control system first, and control system will give power supply to sauna heater.

For external control model, Please connect terminal labeled "L1, L2, L3, N, ⏚" on sauna heater to terminal labeled "U,V,W, N, ⏚" on control system respectively.

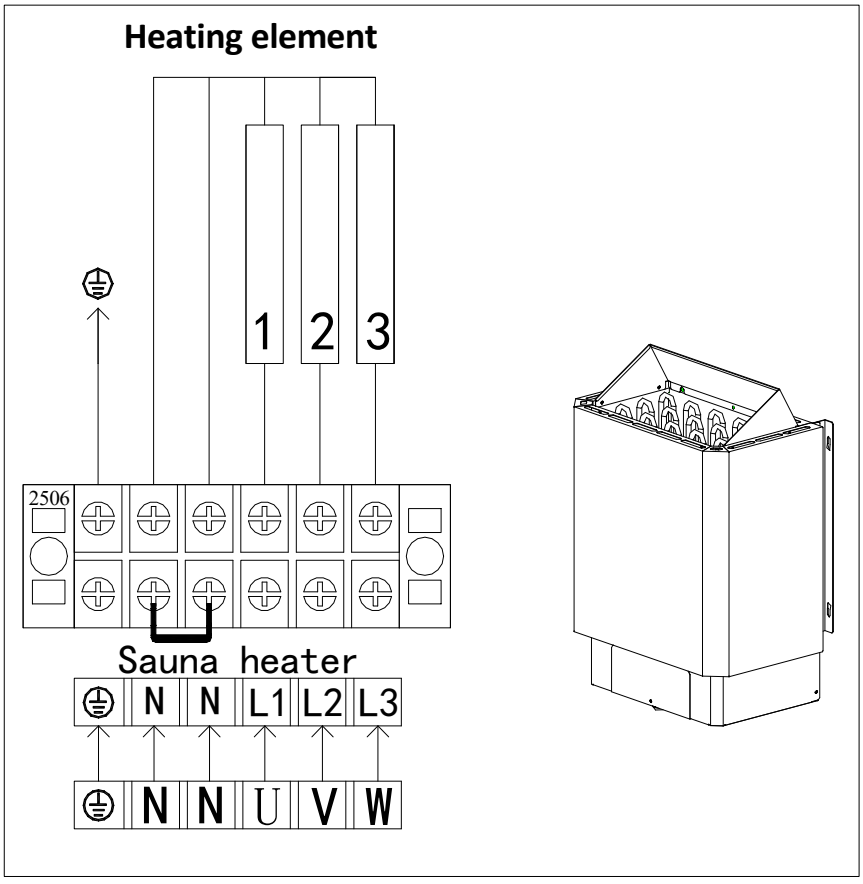

Figure 4. 4.5KW - 9KW European 215~240 V, 1 phase or 380~415V, 3 phase

NOTICE Pictures/drawings for illustrative purposes only

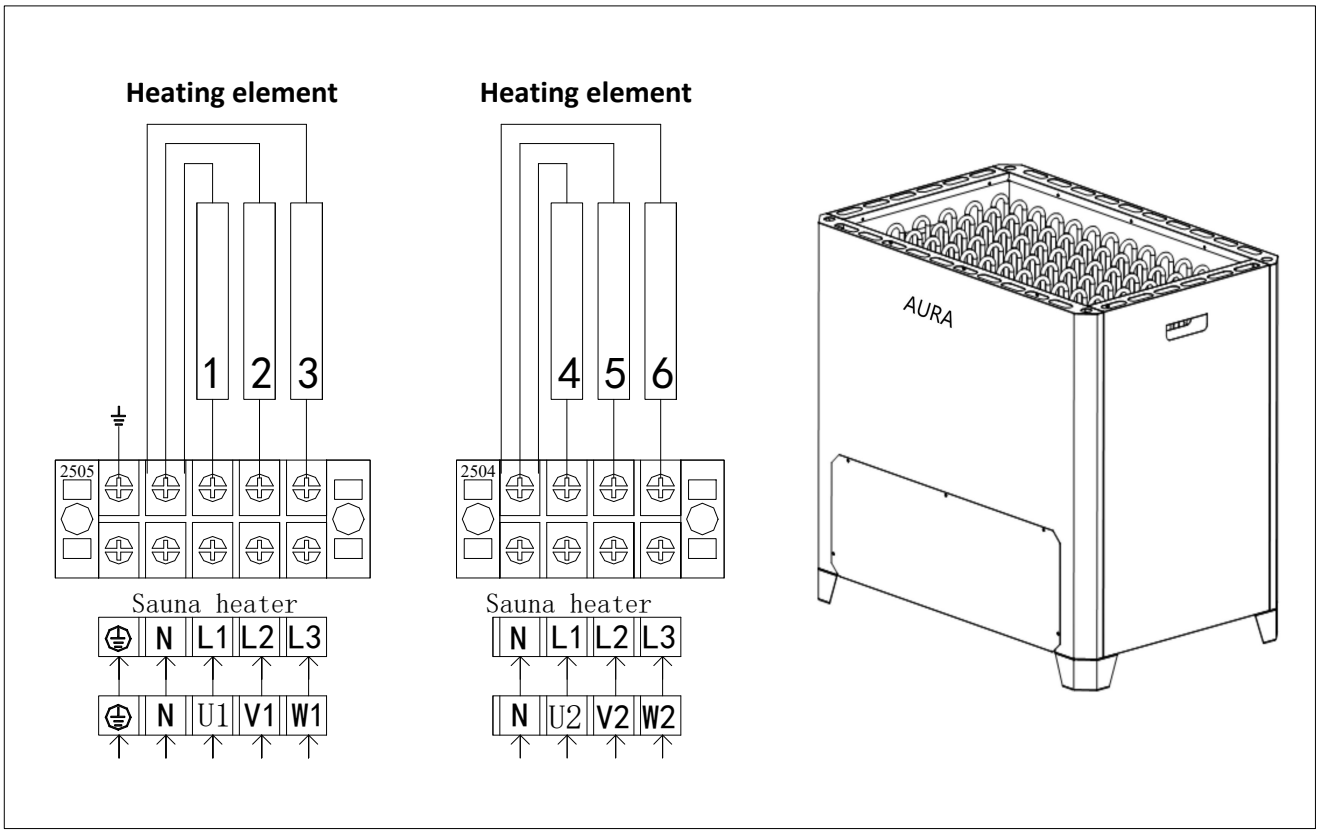

Figure 5. 12KW 15KW 18KW European 380~415V 3 phase

5. Functions And Operation

Ensure there is nothing near the heater before switching on it. The heater and the stones may emit smells when you use the heater for the first time, make sure that the sauna room has been efficiently ventilated or open the sauna room door.

The temperature that bather preferred to is about 60~90^{0}C. Too powerful heater will heat sauna room too quickly while the temperature of stones may remain insufficient. Consequently, the water thrown on the stones will run through but will not produce sufficient vapor. On the other hand, if the heater is under-powered, the heating time will be much longer.

Attentions:

- Do not hang clothes to dry in the heater, for this may cause a risk of fire.
- Do not bake food in heater .
- Keep away from the heater when it is hot, the outer surface of the heater may burn your skin.
- Never put cover on the heater.
- Do not use heater without stone.
- Do not put wood on the heater.
- Do not use chlorinated water.

NOTICE Pictures/drawings for illustrative purposes only

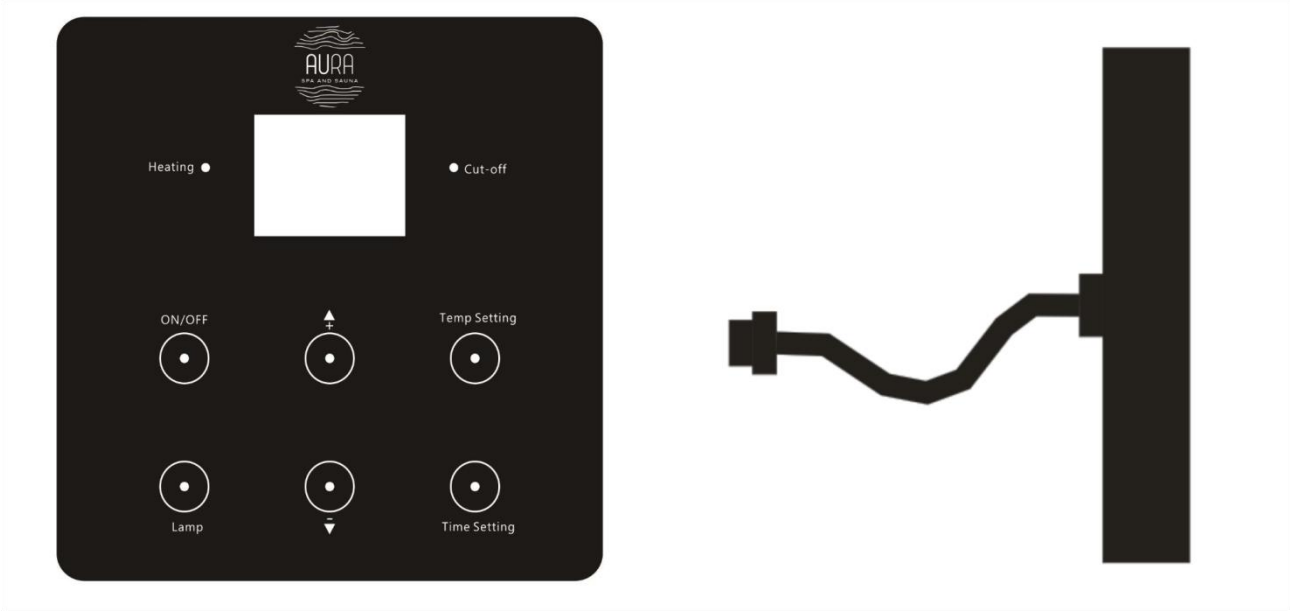

I. ON/OFF

Press 

to switch ON and OFF the system.

Pressing the button from the OFF state to the ON state powers up the sauna heater, the system begins to heat up (if current temperature is lower than setting temperature). Once the temperature arrived setting temperature, the system enters the automatic operating mode.

The system has a memory function, it will remember the last programmed Time and Temperature settings, However, if the system loses power due to a power outage or power off, it will lose all of its memory and will revert to the factory-default Temperature (60℃) and Time (45 minutes). The machine automatically goes through a power-down sequence when the set time lapses OR when the ON/OFF button is toggled to the OFF state, and this process does not interrupt the memory function of the machine.

II. Temperature setting

Press 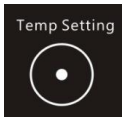

to adjust the temperature.

The LCD and the indicate LED on the left will blink, and the LCD will display the previous set temperature or the default temperature. If power to the system was interrupted before being powered ON again, the LCD displays the default temperature 60℃ (140℉). Press the "▲" or "▼" button to adjust.

NOTICE Pictures/drawings for illustrative purposes only

III. Time setting

Press 

to adjust the working time.

Press "▲" or "▼" button to adjust the operating time to the desired time. Pressing "▲" button continuously until the LCD displays **"CH"** results in the system entering the Continuous Heating/Running mode.

IV. Lamp

This button 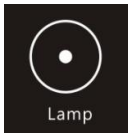

is a Lamp Switch controlling an external light– if connected.

The button can be used as the switch for the external light if the system is connected to the appropriate power supply. The LED is on when the light is turned on. Any externally powered lamp (Under 5A) can be switched only.

V. ▲ Button

Increases the temperature or time.

VI. ▼Button

Decreases the temperature or time.

VII. Switch button on the central control box (some models may not have this button)


This button would only be used for switching off power supply temporarily. If you don't use the sauna control system or sauna heater for a long time, please make sure the main power supply is cut off.

Attention: if this button has been switched off, the control system will lose all of its memory and will revert to the factory-default Temperature (60℃) and Time (45 minutes).

VIII. Resetting the Overheat Protector

If the temperature of the sauna room becomes dangerously high , the overheat protector will permanently cut off the supply of the heater. The overheating protector can be reset after the heater has cooled down. Please check that the stones are piled properly and ensure proper air circulation in the room with inlet and outlet vents .

Attention: If the overheat protector cuts off the power supply, please do not reset it immediately as it may damage the normal operation and lifespan of the over-heat protector.

NOTICE Pictures/drawings for illustrative purposes only

6. Sauna Stone Arrangement

Cautions:

- Do not use the heater without stones, otherwise it may cause a fire.
- Only use the original sauna stone, or the stone for use in heater.
- Do not use ordinary stone, that may emit harmful substance, easily break and do not possess good heating capacity.
- Wash the stones to clear the dust before putting them into the heater. The diameter of stone is about 3-8 cm. Stones of unspecified sizes should not be used.
- **Put the larger stones at the bottom of stove compartment and the smaller ones on the top, do not pile them tightly so that air can flow freely.**
- **The stones should not be placed too tightly or too loosely. The stones should averagely cover the heater element. (See figure 6).**
- Rearrange the stones in the heater at least once a year or twice if it is in frequent use (maximum 500 hours). To decide the correct volume of stones in the heater, refer to technical data provided in table 1.

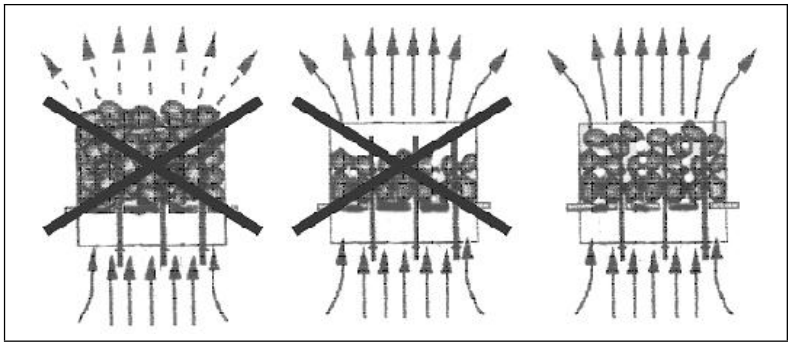

Figure 6: (PILING OF THE SAUNA STONE)

7. Sauna Room Ventilation

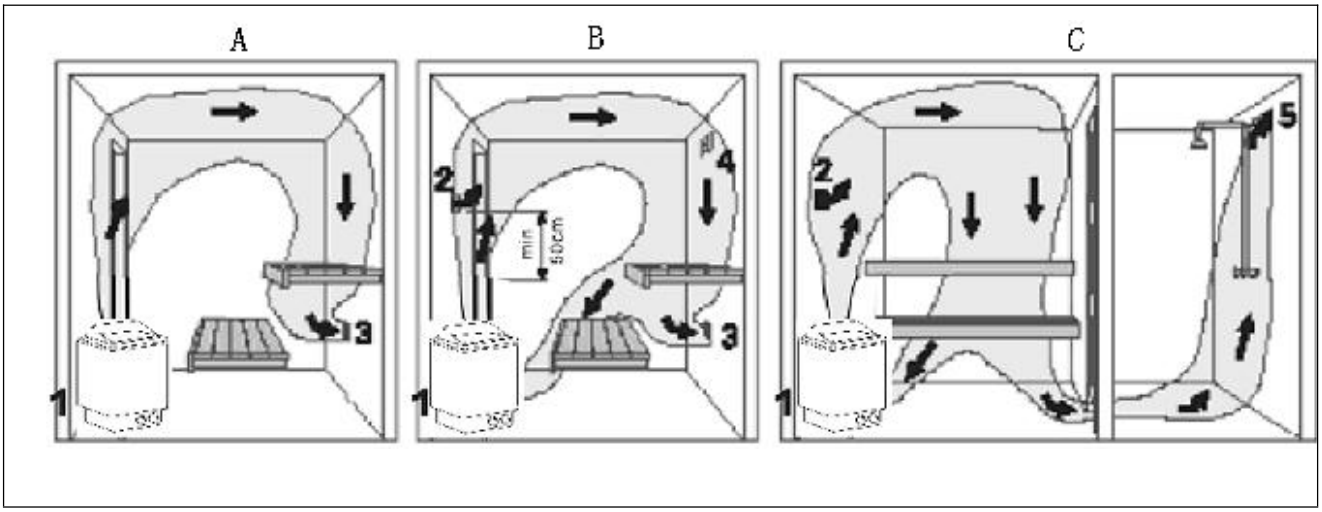

NOTICE Pictures/drawings for illustrative purposes only

1. Air supply vent.
2. Optional air supply vent if mechanical exhaust ventilation is used, the opening is located 50cm above the heater.
3. Exhaust air vent.
4. Drying vent, which is closed during heating and bathing. Sauna room also dried by leaving the door open after bathing.

If there is only an exhaust vent in washing room, leave a MIN 5cm opening under the sauna room door. (Mechanical ventilation is recommended).

Figure 7 (Location of inlet and outlet vent)

- To ventilate the sauna room, the way is to draw air around the heater and move the heat to the farthest part of sauna room.
- Considering air ventilation of sauna room, the inlet vent and the outlet vent should be installed.
- The inlet vent may be installed on the wall below the heater (figure 6A). When using the mechanical ventilation, inlet vent is placed at least 50cm above the heater (figure 6B) or on the ceiling above the heater (figure 6c). The heavy cold air that is blown into sauna room is mixed with the light hot air from the heater, bringing fresh air for the bathers. The inlet vent should have a diameter of 5-10 cm.
- The outlet vent should be placed diagonally opposite to the inlet. It is advised the outlet vent is placed under the platform in a sauna room as far as possible from the inlet vent. It can be installed near the floor or lead outside through a pipe from the floor going to a vent to the sauna ceiling, or under the door (to the washroom). In this case, the sill slot must be at least 5cm and it is recommended there is mechanical ventilation is the Washroom. The size of the outlet should be twice of the inlet.

8. Sauna Room Insulation

The door, ceiling and walls of sauna room are necessary to be insulated in order to preserve heat. To prevent spreading moisture to other rooms or wall structure, make sure that moisture-roof is appropriate in sauna room. Moisture-proof must be placed between panel and heating insulation. Moisture and thermal proofing should be installed from outside to inside, such as:

- Recommend that the MIN thickness of the thermal insulation in the walls is 50mm and in the ceiling is 100mm.
- Aluminum foil laminate is affixed over the heating insulation as a vapor barrier.
- Leave at least 20mm air slot between vapor barrier and inside panel.
- Leave a slot between wall panel and ceiling to prevent gathering moisture behind the panel.

NOTICE Pictures/drawings for illustrative purposes only

9. Warranty And Services

(1) The sauna heater (except heating elements) carries a 24-month warranty when installed for home use. For sauna heater intended for home use but installed in public or commercial venues such as communal saunas in apartment complexes, hotels, leisure centers, gyms etc. has its warranty period reduced to 12 months.
(2) The heating element carries a 12-month warranty when installed for home use and a 6-month warranty when installed for public or commercial use.
(3) The controller carries a 24-month warranty when used in a home and carries a 12-month warranty when used in a commercial application.
(4) Warranty period will count from the ex-factory date of the sauna heater.
(5) If the after sales problems are found to be caused by the user's failure to perform regular maintenance on the machine, the warranty will be null and void.
(6) Limited free warranty only includes us providing free spare parts and our remote services; and does not include any other direct or indirect costs / losses.
(7) Limited warranty is offered to all customers.
(8) Our company has the right to decide whether to repair or to replace a part. Approval must be obtained from our company before shipping back a product. The customer bears transportation fees and any parts fee (when applicable) in advance.
(9) This warranty does not cover any damages, malfunction or failures caused by, or resulting from unauthorized installation, maintenance and repair, improper power supply etc.
(10) Damage caused by accident, misuse of chemical products or any other reasons which are beyond our company's control will not be covered. Any product whose label, nameplate has been removed, altered, damaged is not covered either.
(11) Use in a high salinity or any other extreme corrosive environment is not covered by the warranty.
(12) After the warranty period lapses, support services are still available to our customers when all costs are covered by the customer.
(13) The buyer must report any faults and malfunction of the product immediately or within 14 days of their appearance. The report can be made to the manufacturer, the supplier, or an installation company authorized by the manufacturer. Warranty claims must be made no later than 14 days after the warranty period for the product has expired.
(14) The buyer must take good care of the product. **When receiving the product, the buyer must inspect it for damage caused during transport and storage**. Any damage must be reported to the supplier or the delivery company immediately. The manufacturer is not responsible for any issues, malfunction or defect that are the result of transportation or incorrect storage, installation or use not in accordance with the manufacturer's recommendations, neglect of maintenance, or the placement of product in conditions that do not meet the manufacturer's recommendations.
(15) Please contact our company if you need additional information. Thank you.



AURA
SPA AND SAUNA

SPAUNA - MÕNUSA SELTSKONNA JA HEA TUJU MAALETOOJA.

NOTICE Pictures/drawings for illustrative purposes only