Tower Heater with Safety Guard Manual



Please Read The Manual Carefully Before Installation

All electrical wiring to be installed by a qualified licensed electrician in accordance with National Electrical Code and local electrical code.

Table of Contents

1. Introduction 1
2. Safety Warning 1
3. Parameters And Dimensions 3
4. Sauna Room Ventilation 5
5. Sauna Room Insulation 6
6. Installation 7
    6.1 Safety distances 7
    6.2 Installing the sensor 7
    6.3 Installing the wood guard 9
    6.4 Piling of the sauna stones 11
    6.5 Installing the control system 14
        6.5.1 Installing the central box 14
        6.5.2 Installing the controller 14
        6.5.3 Installing the lamp (Optional) 15
    6.6 Installing the electrical 15
7. Functions And Operation 18
8. Troubleshooting 20
9. Warranty Policy 21

1. Introduction

Thank you for choosing tower heater with well-designed structure, steady performance and convenient installation. Sauna-bathing kit is mainly composed of the heater and sauna room. After Sauna-bathing, people feel the flow of the spirits, excrete virus in body, eliminate fatigue, release the muscle and also good for health.

2. Safety Warning

READ THE WARNINGS AND MANUAL CAREFULLY BEFORE USING THE PRODUCT!



Installation and maintenance

- The sauna heater is designed for the heating of a sauna room to bathing temperature. It is not to be used for any other purpose! The control unit is meant for controlling the functions of a sauna and a sauna heater. It is not to be used for any other purpose!
- The heater may only be connected to the electrical network in accordance with the current regulations by an authorized, professional electrician. After completing the installation, the person in charge of the installation should give these instructions to the owner of the sauna or to the person in charge of its operation.
- All maintenance that requires special skills must be performed by a trained professional.
- Always disconnect the device from the electricity network before carrying out any maintenance work!
- Check the device for visible damage before installing and using the device. Do not use a damaged device.
- This device is allowed to use by 8 years old or older children and persons with reduced physical, sensory or mental capabilities, or persons with lack of experience and knowledge, if they are supervised or they have

been instructed to use the device safely and if they are aware of the dangers involved.

- Children should not play with the device. Children should not clean or do operations to the device without supervision.
- It is absolutely necessary to install the heater according to values stated in the instructions of installation and use. Neglecting them causes a risk of fire.
- Only one electrical heater may be installed in the sauna room, unless otherwise stated in the instructions.
- The device must be installed in such a way that the warning texts are easy to read after installation.
- The heater or device must not be installed in a wall recess, unless otherwise stated in the instructions.
- If a guardrail is made around the heater, the safety distances specified in the instructions of

installation and use manual must be observed.

- If suitable accessories are installed in the device, follow the accessory-specific operating and installation instructions!
- Ensure adequate ventilation in the sauna room (Air should change six times per hour).
- Do not place the supply air vent so that the air flow cools the temperature sensor (see temperature sensor installation instructions!)
- If the supply cord is damaged, it must be replaced by the manufacturers' service person or a similarly qualified

person in order to avoid a hazard.

- Use of a PVC-insulated cable as a connection cable for the heater is prohibited due to its thermal fragility.
- Always check condition of the junction box connectors when installing the heater. We recommend screw

connectors. Avoid spring-loaded connectors!

- Do not connect power supply to electric heater via a residual current device.
- If device is used in public saunas without a timer, the indicator light, which tells if the device is on, must be placed in the room where the device is controlled.
- Use protective gloves when piling the stones.
- A bare heating element can endanger combustible materials even outside the safety distances. Check that no heating elements can be seen behind the stones.
- No such objects or devices should be placed inside the heater stone space or near the heater that could change the amount or direction of the air flowing through the heater.
- Wipe the heater from time to time with a damp cloth to remove dust and dirt. If necessary, use mild detergents. Do not use running water for cleaning.
- Before cleaning, make sure that the device has cooled down completely.
- Pile the stones or replace the broken stones with new ones at least every year.



Instructions for use and bathing

Beware of hot heater. The stones and metal parts of the heater may burn the skin.

- Always check that there is no objects on the heater or near the heater before switching it on.
- During the first heating sessions, the heater may produce an odour, ensure adequate ventilation of the sauna room
- Do not throw or pour too much water on the heater at once, boiling water may splash on bathers.
- Never throw water on the stones when there are people near the heater.
- The maximum volume of the ladle is 0.2 litres.
- Do not throw any other water on the heater than that specified in the instructions manual of the heater.
- Only special aromas designed for sauna water may be used according to their instructions.
- Staying in the hot sauna for long periods of time makes the body temperature rise, which may be dangerous.
- Keep children away from the heater.
- Do not let young, handicapped or ill people bathe in the sauna on their own.

- Consult your doctor about any health-related limitations to bathing.
- Be very careful when moving in the sauna, as the platform and floors may be slippery.
- Never go to a hot sauna if you have taken alcohol, strong medicines or narcotics.
- Never sleep in a hot sauna.
- Sea air and a humid climate may corrode the metal surfaces of the heater.
- Do not hang clothes to dry in the sauna, as this may cause a risk of fire. Excessive moisture content may also cause damage to the electrical equipment.
- Do not press the overheating protection button before the cause of the fault has been found. Only persons authorised to carry out electrical installations can reset the overheat protector, unless otherwise stated in the instructions manual.
- Always check that the heater has switched off and stopped heating after the on-time period has elapsed.
- Particles disintegrating from the sauna stones may damage sensitive floor coverings and cause fire hazard.
- In public saunas, where the heater is used without a timer or continuously for longer than the timer of the heater or the control unit allows with the factory settings, the device must be constantly supervised.
- The sauna room and surroundings of the heater must always be checked before the heater is switched on again or it is switched on with the remote control system.
- The sauna room and surroundings of the heater must always be checked before the device is brought into standby mode required by remote control or pre-timed operation.
- The control unit can be used to remotely control the heater once the heater or sauna room door is equipped with a secure switch (safety or door switch)

3. Parameters And Dimensions

Installation details	Power	9KW
	Heating element (N*KW)	3*3 KW
	Voltage/Current	380-415 V
	Weight	21.5 kg
	Stones	Max. 128 kg
Dimensions of tower heater (Ref. To Figure 1)	Height	150 cm
	Width	42.3 cm
	Depth	42.3 cm
Dimensions of wood guard (Ref. To Figure 3)	Height	4.85 cm
	Width	46.7 cm
	Depth	46.7 cm
Sauna Room	Volume m^3	9 ~ 13 m^3
	Sauna room height min.	190 cm

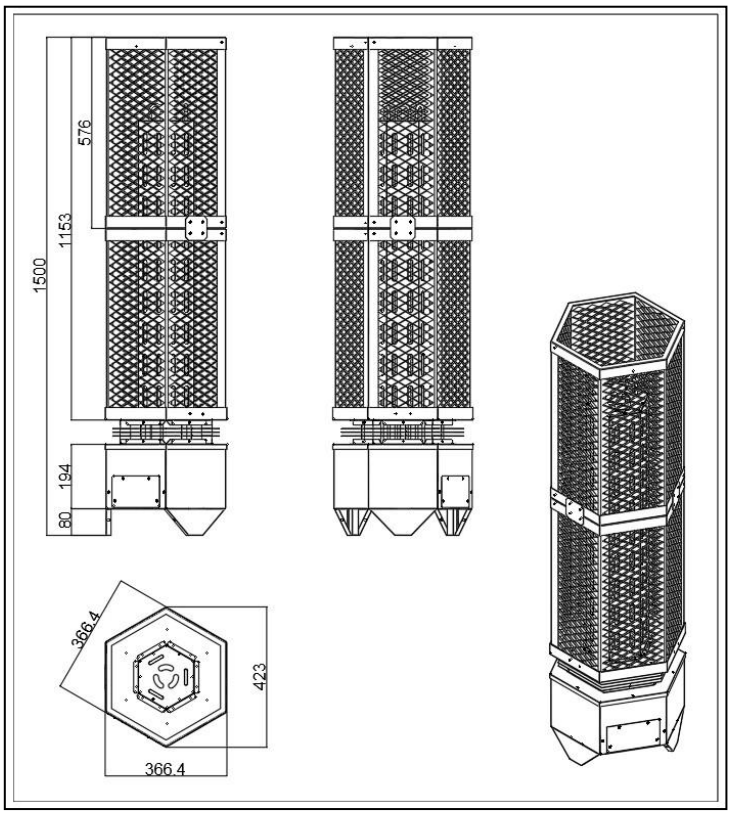

Figure 1. Dimensions of tower heater

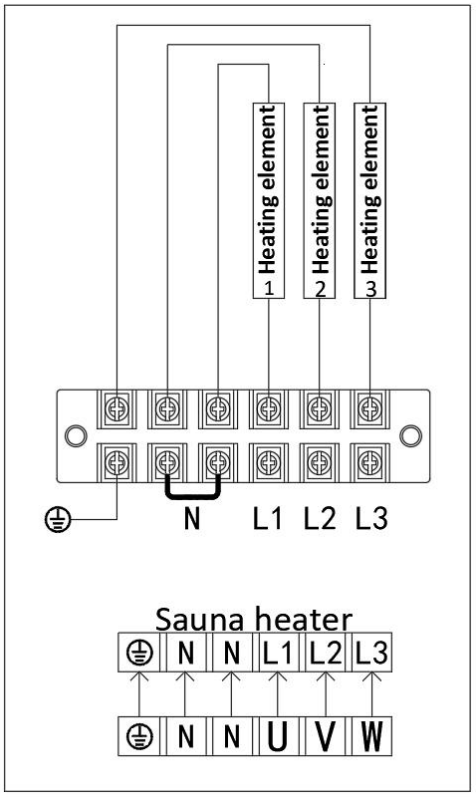

Figure 2. Circuit diagram

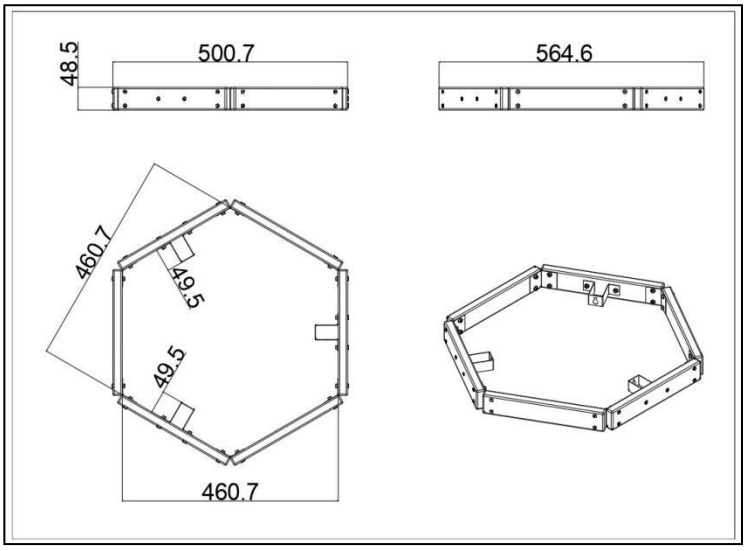

Figure 3. Dimensions of wood guard

Do not cover!

Be careful of hot steam when using the appliance!

4. Sauna Room Ventilation

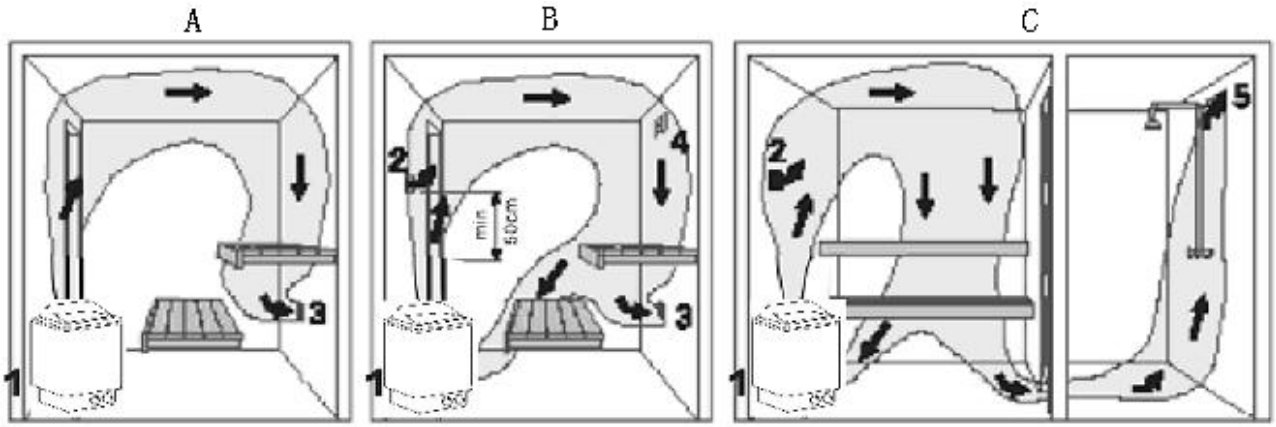

1. Air supply vent.
2. Optional air supply vent if mechanical exhaust ventilation is used, the opening is located 50cm above the heater.
3. Exhaust air vent.
4. Drying vent, which is closed during heating and bathing. Sauna room also dried by leaving the door open after bathing.

If there is only an exhaust vent in washing room, leave a MIN 5cm opening under the sauna room door. (Mechanical ventilation is recommended).

Location of inlet and outlet vent

- To ventilate the sauna room, the way is to draw air around the heater and move the heat to the farthest part of sauna room.
- Considering air ventilation of sauna room, the inlet vent and the outlet vent should be installed.
- The inlet vent may be installed on the wall below the heater . When using the mechanical ventilation, inlet vent is placed at least 50cm above the heater or on the ceiling above the heater (figure 8c). The heavy cold air that is blown into sauna room is mixed with the light hot air from the heater, bringing fresh air for the bathers. The inlet vent should have a diameter of 5-10 cm .
- The outlet vent should be placed diagonally opposite to the inlet. It is advised the outlet vent is placed under the platform in a sauna room as far as possible from the inlet vent. It can be installed near the floor, or lead outside through a pipe from the floor going to a vent to the sauna ceiling, or under the door (to the washroom).In this case, the sill slot must be at least 5cm and it is recommended there is mechanical ventilation is the Wash Room . The size of the outlet should be twice of the inlet.

5. Sauna Room Insulation

The door, ceiling and walls of sauna room are necessary to be insulated in order to preserve heat. To prevent spreading moisture to other rooms or wall structure, make sure that moisture-roof is appropriate in sauna room. Moisture-proof must be placed between panel and heating insulation. Moisture and thermal proofing should be installed from outside to inside, such as:

- Recommend that the MIN thickness of the thermal insulation in the walls is 50mm and in the ceiling is 100mm.
- Aluminum foil laminate is affixed over the heating insulation as a vapor barrier.
- Leave at least 20mm air slot between vapor barrier and inside panel.
- Leave a slot between wall panel and ceiling to prevent gathering moisture behind the panel.

6. Installation

6.1 Safety distances

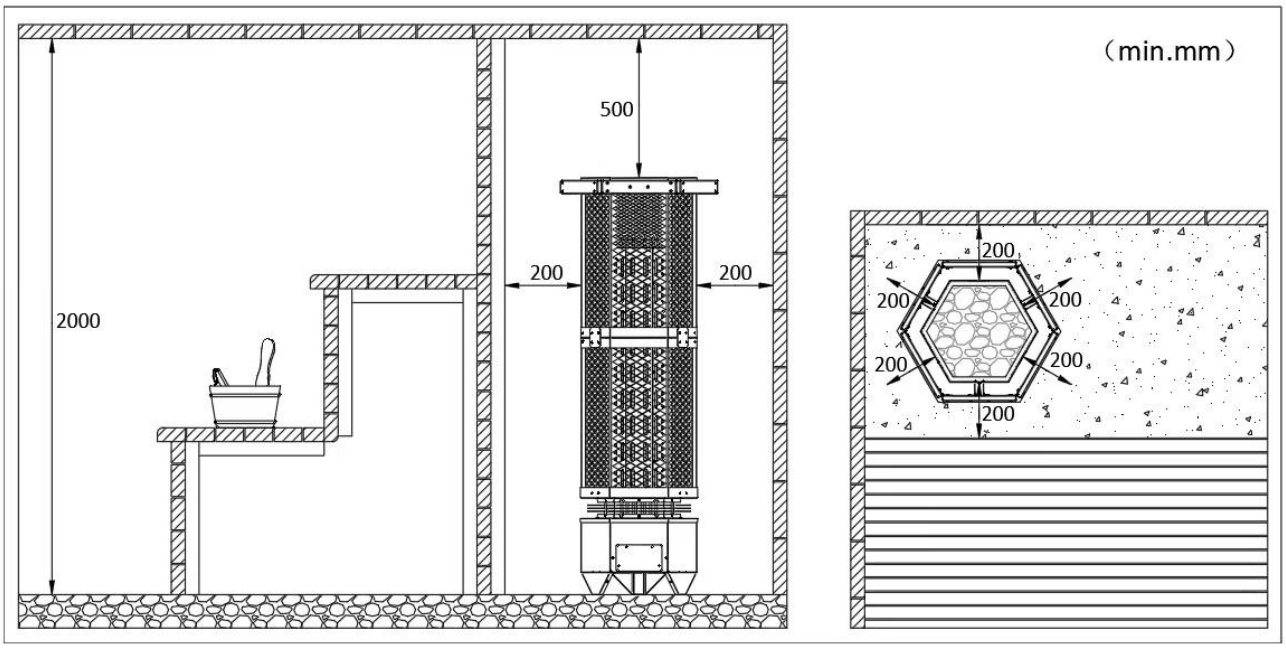

6.2 Installing the sensor

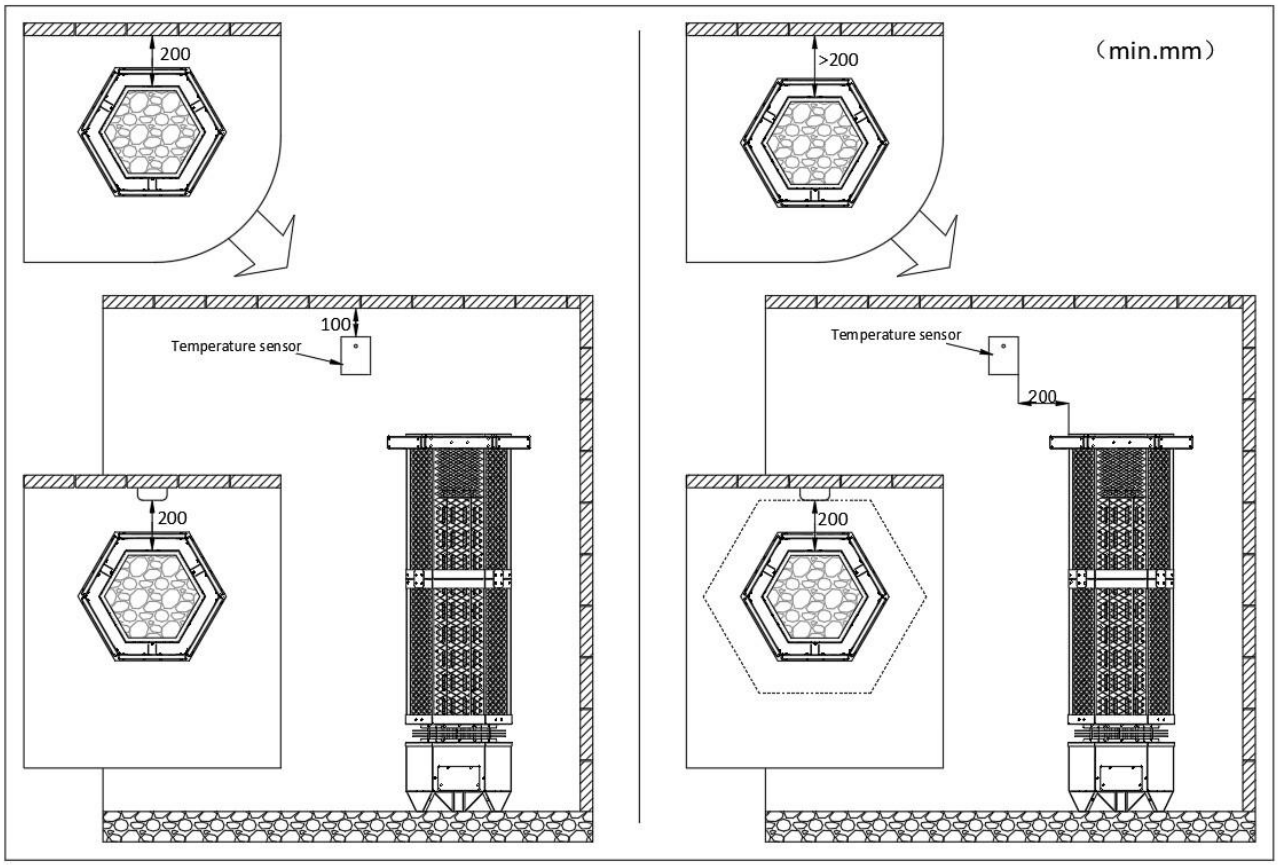



1. **Drill** a hole in the wall (wall with tiles).

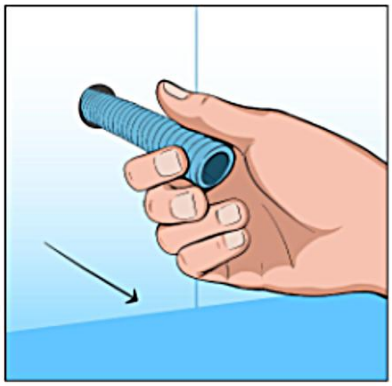

2. **Pull** a pipe for electric wires trough the hole.



3. **Cut** the pipe with knife at the wall.

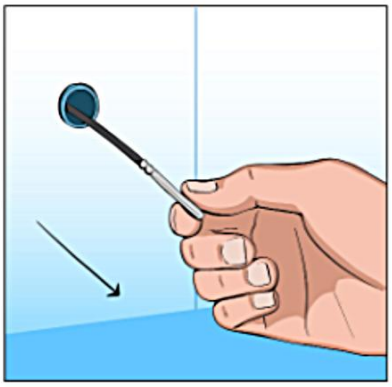

4. **Pull** the temperature sensor wire trough the pipe.

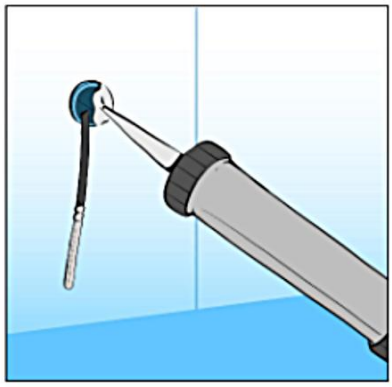

5. **Close** the opening with silicone.

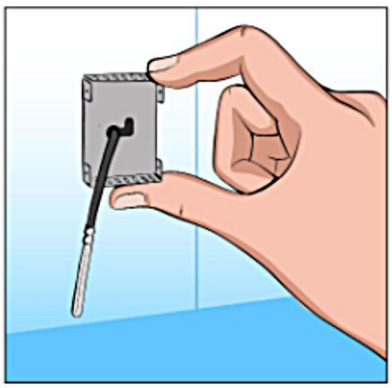

6. **Pull** the wire through the back cover blade and **glue** the cover on the hole.

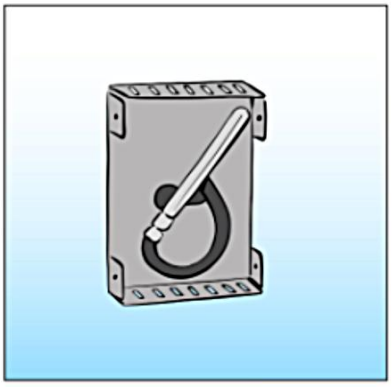

7. **Put** the temperature sensor inside the back cover

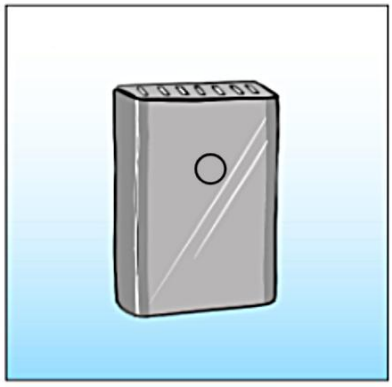

8. **Put** the front cover on.

There's an over-heat protector on the temperature sensor box.

6.3 Installing the wood guard

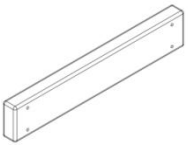

3pcs
Wood panel e

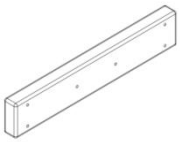

3pcs
Wood panel d

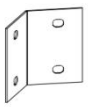

6pcs
Retainer

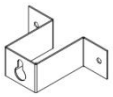

3pcs
Bracket



31pcs flange nut



31pcs flange nut



1pc hexagonal wrench

Step one - Use M4*25 Hexagon socket screws & flange nuts to fix retainer on the wood wood panel (e) & wood panel (d), with hexagonal wrench. Ref to below 2 figures.

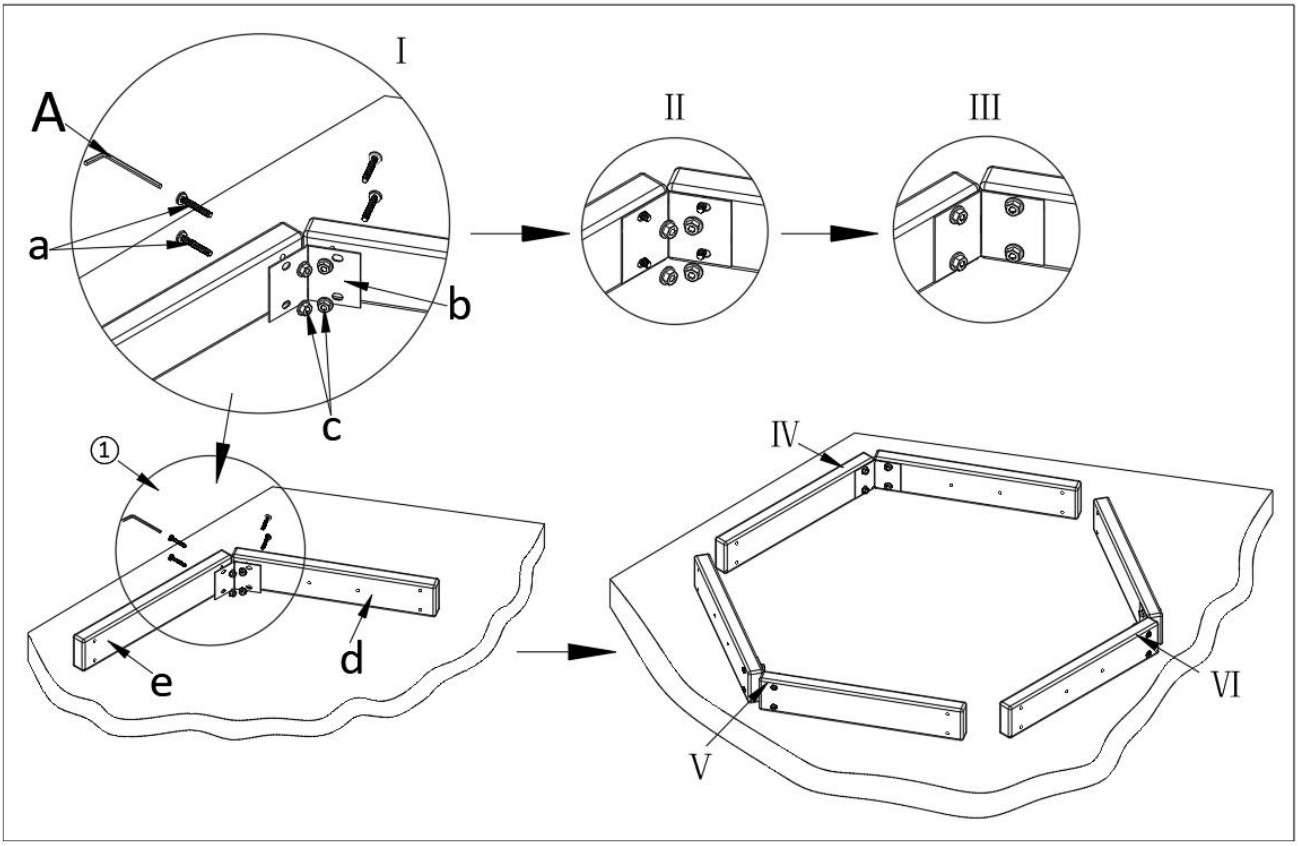

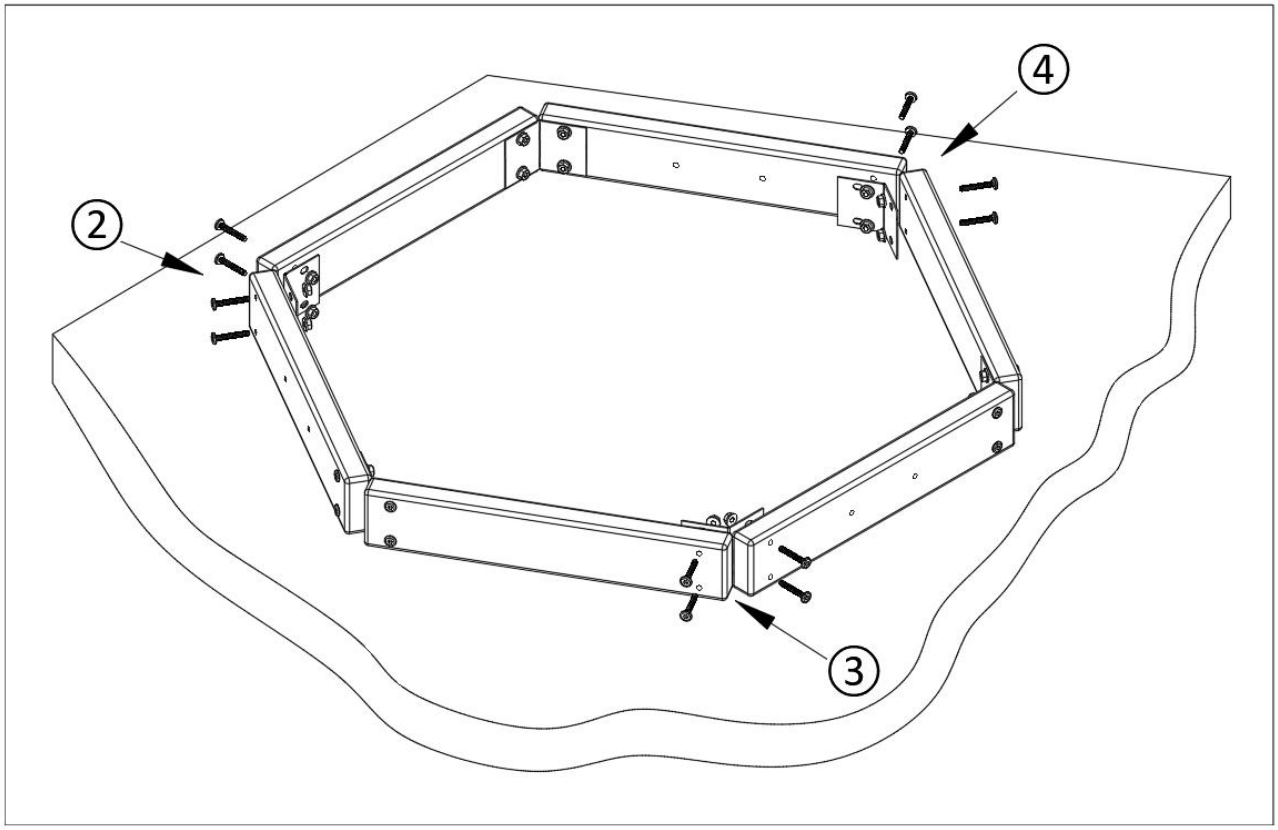

Step two - Fix the brackets on the wood panel with M4*25 Hexagon socket screws & flange nuts

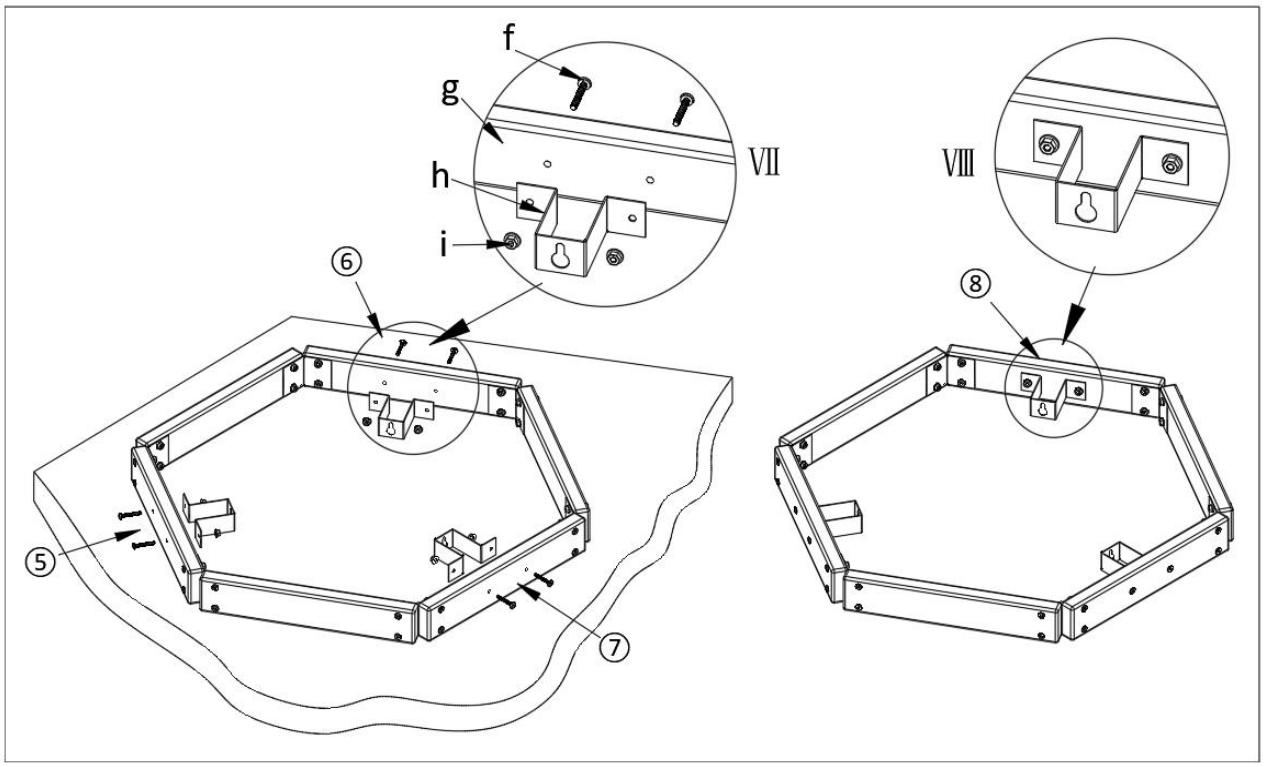

6.4 Piling of the sauna stones

Cautions:

- Do not use the heater without stones, otherwise it may cause a fire.
- Only use the original sauna stone, or the stone for use in heater.
- Do not use ordinary stone, that may emit harmful substance, easily break and do not possess good heating capacity.
- Wash the stones to clear the dust before putting them into the heater. The diameter of stone is about 3-8 cm. Stones of unspecified sizes should not be used.
- **Put the larger stones at the bottom of stove compartment and the smaller ones on the top, do not pile them tightly so that air can flow freely.**
- **The stones should not be placed too tightly or too loosely. The stones should averagely cover the heater element.**
- Rearrange the stones in the heater at least once a year or twice if it is in frequent use (maximum 500 hours). To decide the correct volume of stones in the heater, refer to technical data provided in table 1.

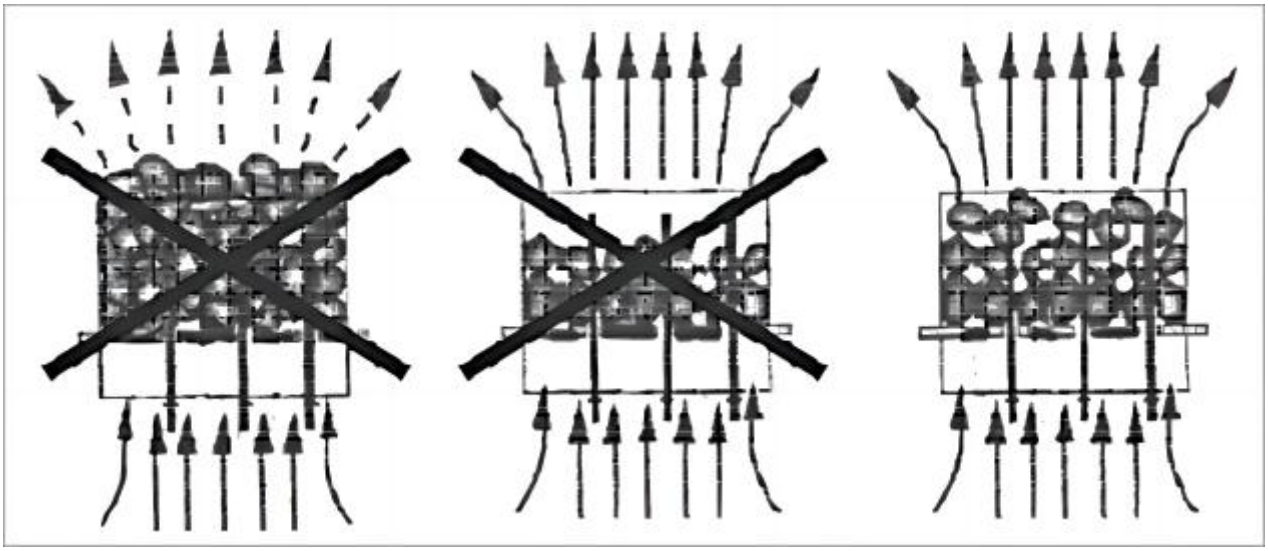

PILING OF THE SAUNA STONE

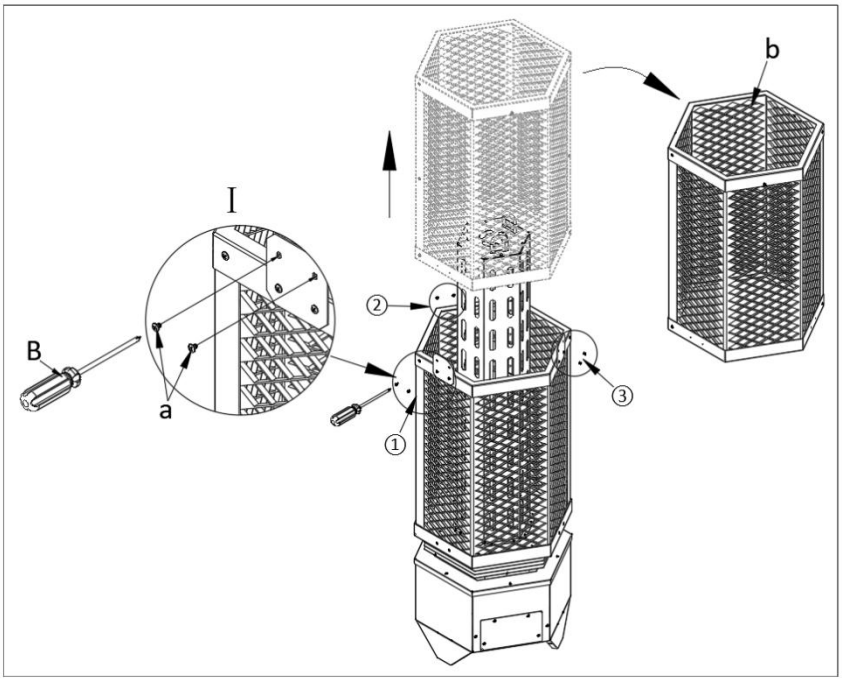

Use a screwdriver (**B**) to remove the 6pcs M4*6 fastening screws (**a**), and then take off the upper cover (**b**)

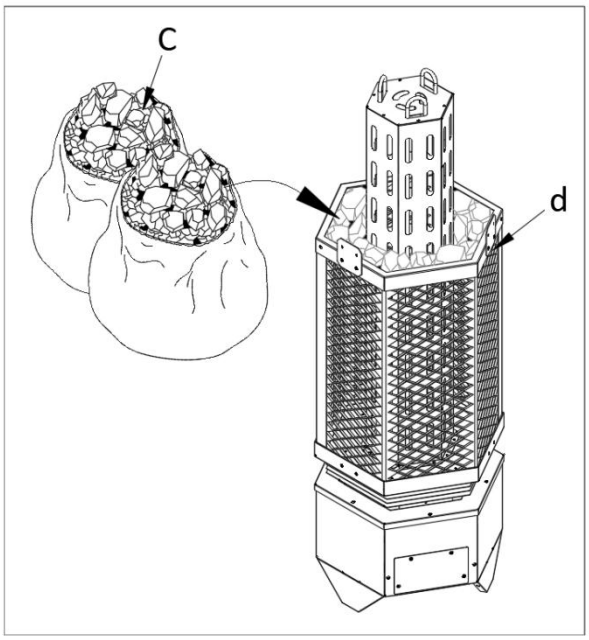

Fill the sauna stones (**c**) into the stone guard (**d**) at the bottom layer of the sauna heater until the space inside the bottom stone guard is fully filled. Ensure not to obstruct the installation of the top stone guard.

Please wear gloves when piling the sauna stones.

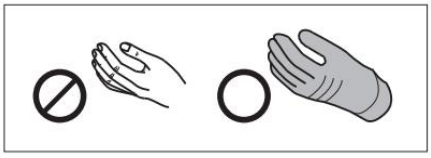

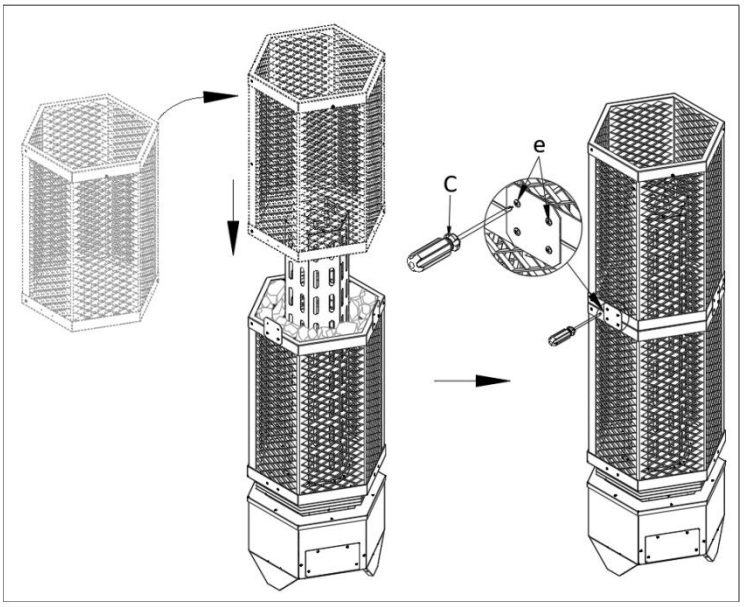

Reinstall the removed top stone guard back to its original position on the sauna heater. Use a screwdriver to reattach the previously removed fastening screws (M4*6) to the heater.

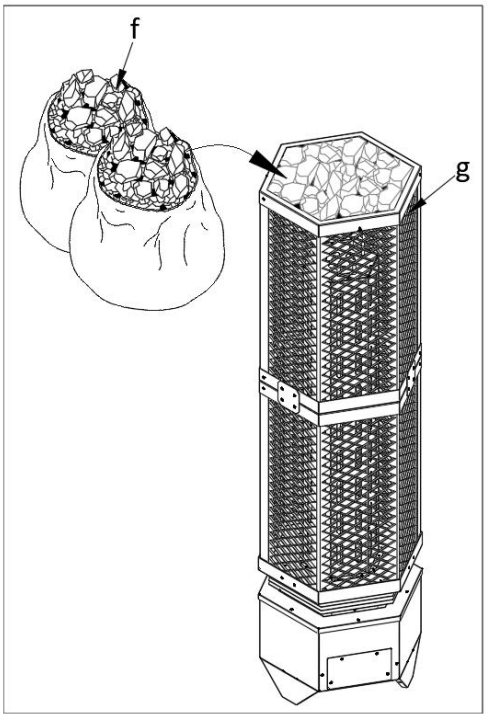

Fill the sauna stones (**f**) into the top stone guard (**g**) of the heater until the space inside is fully filled. Protect the heating element during the stone filling process. You may need to elevate to assist with the filling, so please pay attention to safety.

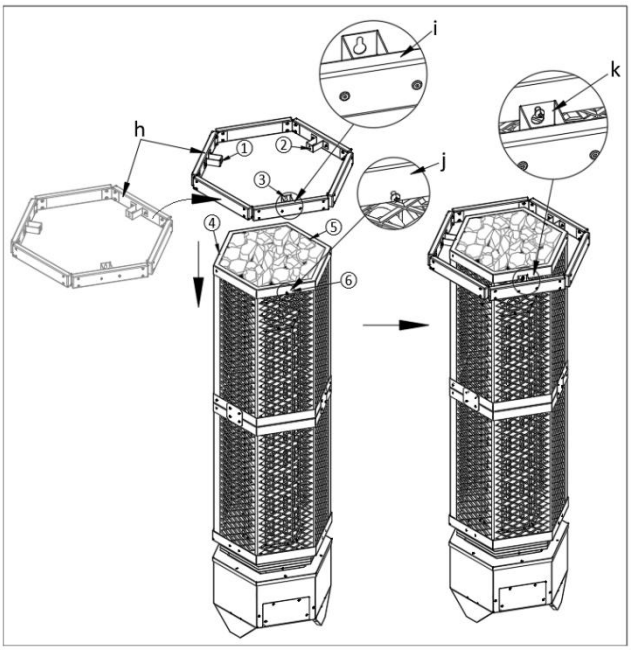

Install the assembled wood guard (h) on the top of heater. The hanging holes on the fixed brackets (i) at positions marked with numbers ①②③ on the guardrail must align with the screws (j) at positions marked with numbers ④⑤⑥ on the top stone guard of the heater, as shown in **k** after installation. The fixed brackets are secured to the guard using the screws. During installation, there may be difficulties in aligning the fixed brackets with the screws. Use a hexagonal wrench to slightly loosen the hexagonal screws on the guard for adjustments. After securing the wood guard, tighten the screws with the wrench. You may need to use a step ladder during the installation process, so please pay attention to safety.

6.5 Installing the control system

Attention: The controller and central control box MUST be installed OUTSIDE the sauna room.

6.5.1 Installing the central box

Central control box size	Screws distance
260*210*80mm	178mm 

6.5.2 Installing the controller

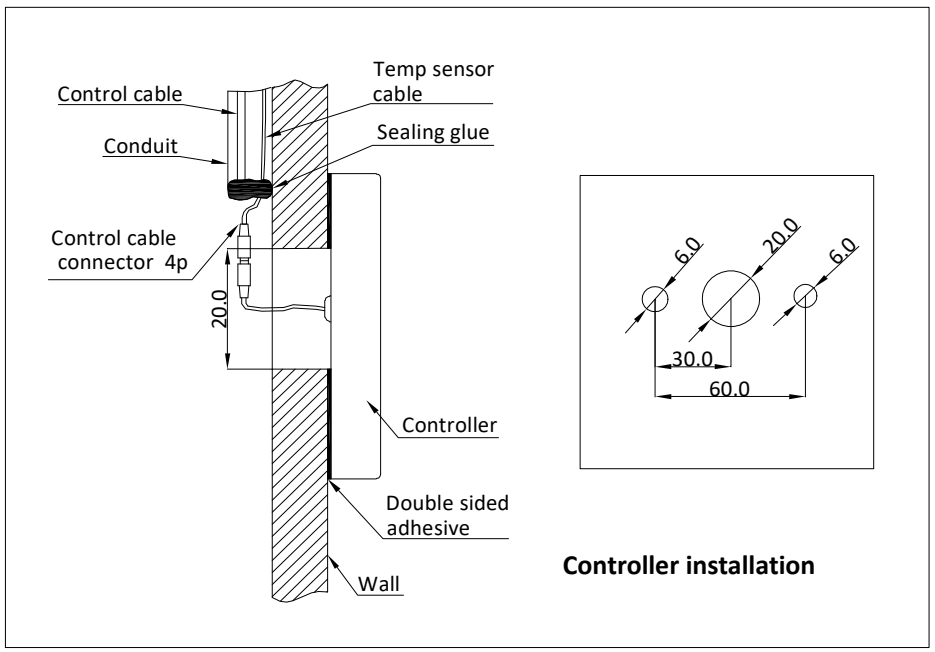

Controller installation

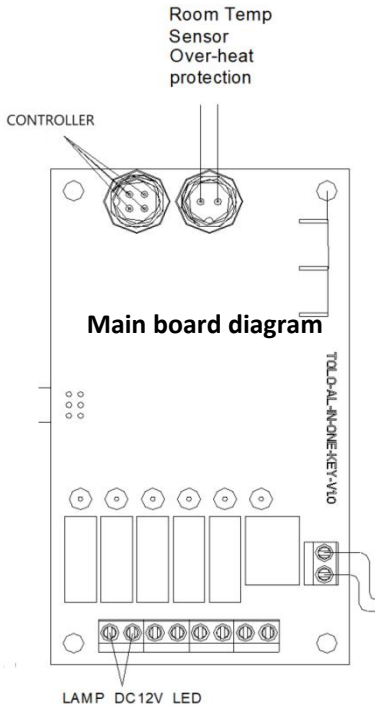

The controller should be installed at a height of approximately 1.2m from the ground, OUTSIDE the sauna room but indoors, nearby the sauna room or another place where easy to operate.

Route the control cable through the conduit (ϕ25mm), with one end connecting to the controller and the other end connecting to the 4-pin aviation plug on the main board. You can see the main board after removing the cover of central control box.

6.5.3 Installing the lamp **(Optional)**

This button 

can be used as the switch for the external light (under 5A).

The light must connect to an **appropriate power supply**.
The LED is on when the light is turned on.

CAUTION DO Not directly connect the light to the PCB, neither 12V nor 220V, which will lead to short circuit on PCB. If you need to connect a light, a converted module must be installed (which can be ordered from us).

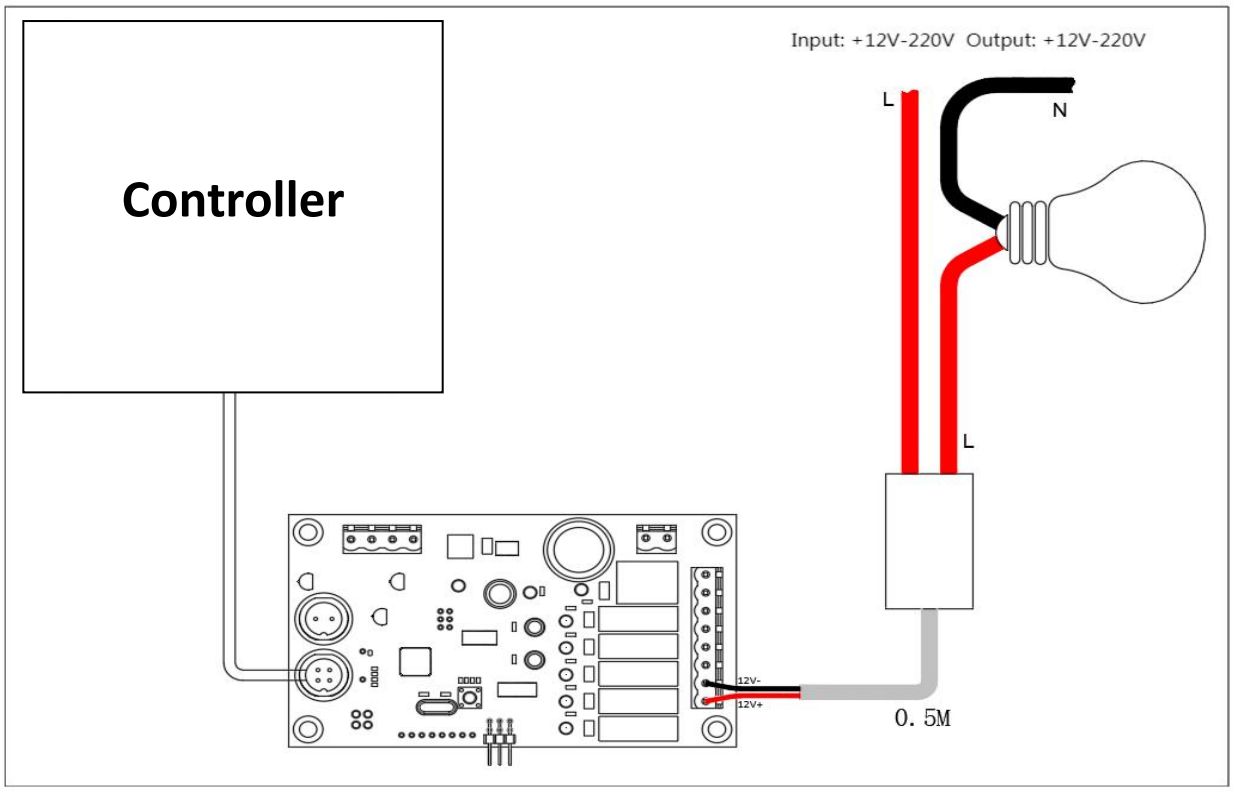

6.6 Installing the electrical

Caution

- All circuits should be installed by licensed electricians and conform to local and national codes. Improper electrical connection can cause fire or electric shock.
- Power supply must be cut off before installation, maintenance and repair. Touch the on/ off button on the controller can NOT cut power from the supply.
- A Residual Current Device (RCD) must be installed in the power supply circuit for safety purpose.
- Choose the cable wire according to sauna heater manual and the cable wire need to be able

to bear extremely high temperature 170℃ (It is recommended to use rubber cable wire).

For All AURA external control sauna heater, power will be supplied to central control box first, then central control box will distribute 220V/380V power to sauna heater as well as DC12V power to the control panel.

Please DO NOT put the AC power cables and DC power cables through the same hole.
There are three holes on the central control box.
One for the DC cables: controller cable and temperature sensor cable;
One for power input;
One for power output.

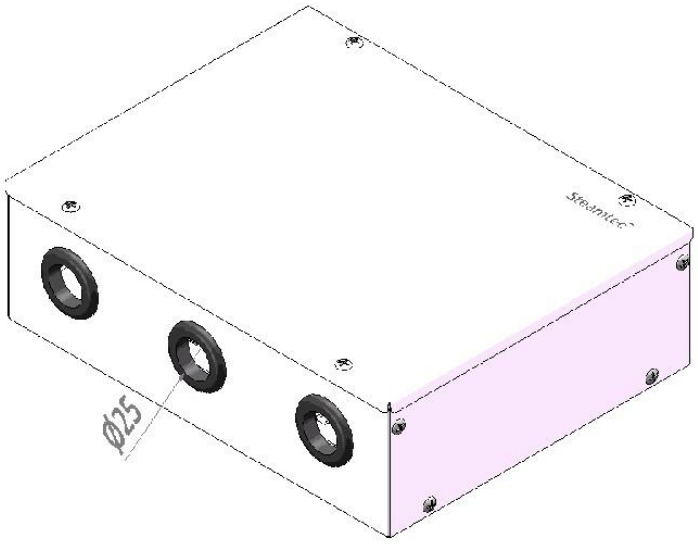

(1). First take off the cover of the central control box, insert 5-core power wire (three phase, 380-415V, 50/60Hz) through one of the hole at the side of the central control box, connect it to the "POWER INPUT" terminal in central control box, see below Figure 5-7, so that power will be supplied to control system.

Three phase, 380-415V, 50/60Hz power supply: connect 3 live wires to the terminal labeled as "L1", "L2" and "L3" respectively; connect the null wire to the terminal labeled as "N"; and connect the earth wire to the terminal labeled as "⏚".

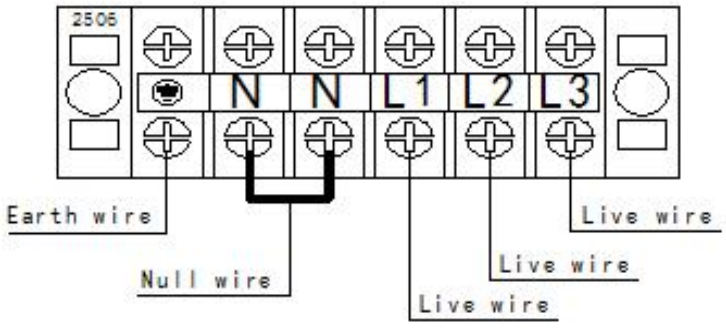

(2). Second, please connect “CONNECT TO SAUNA HEATER ” terminal labeled “ U, V, W, N, ⏚ ” in central control box (see Figure 5-7) to terminal labeled “ L1, L2, L3, N, ⏚ ” on sauna heater respectively, so that control system can give the power to sauna heater.

IMPORTANT ATTENTION:

One relay can carry maximum 3KW heating element, do not connect heating elements more than 3KW to one relay, as the relay may burn down.

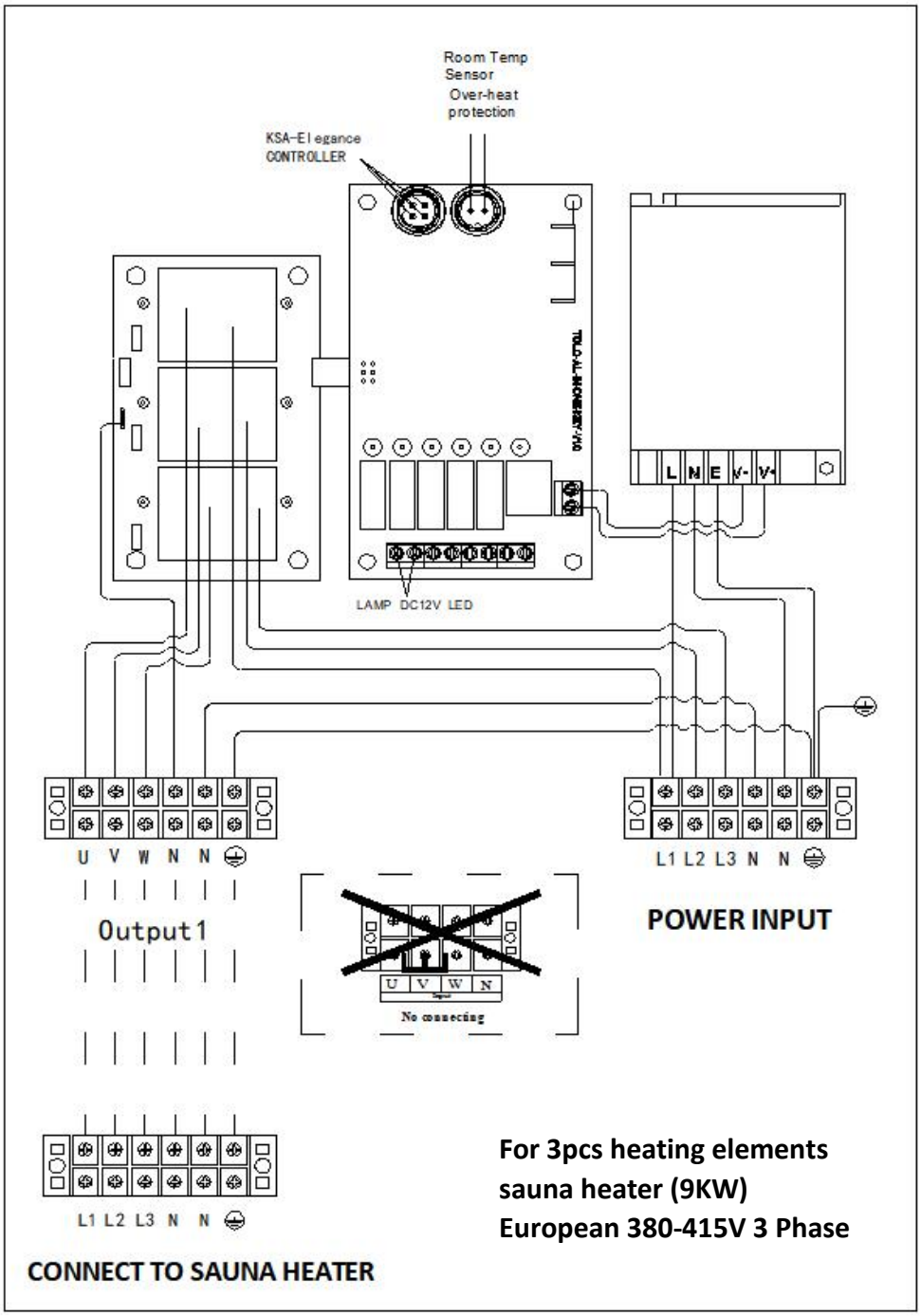

7. Functions And Operation

Ensure there is nothing near the heater before switching on it. The heater and the stones may emit smells when you use the heater for the first time, make sure that the sauna room has been efficiently ventilated or open the sauna room door.

The temperature that bather preferred to is about 60~90^{0}C. Too powerful heater will heat sauna room too quickly while the temperature of stones may remain insufficient. Consequently, the water thrown on the stones will run through but will not produce sufficient vapor. On the other hand, if the heater is under-powered, the heating time will be much longer.

Attentions:

- Do not hang clothes to dry in the heater, for this may cause a risk of fire.
- Do not bake food in heater .
- Keep away from the heater when it is hot, the outer surface of the heater may burn your skin.
- Never put cover on the heater.
- Do not use heater without stone.
- Do not put wood on the heater.
- Do not use chlorinated water.

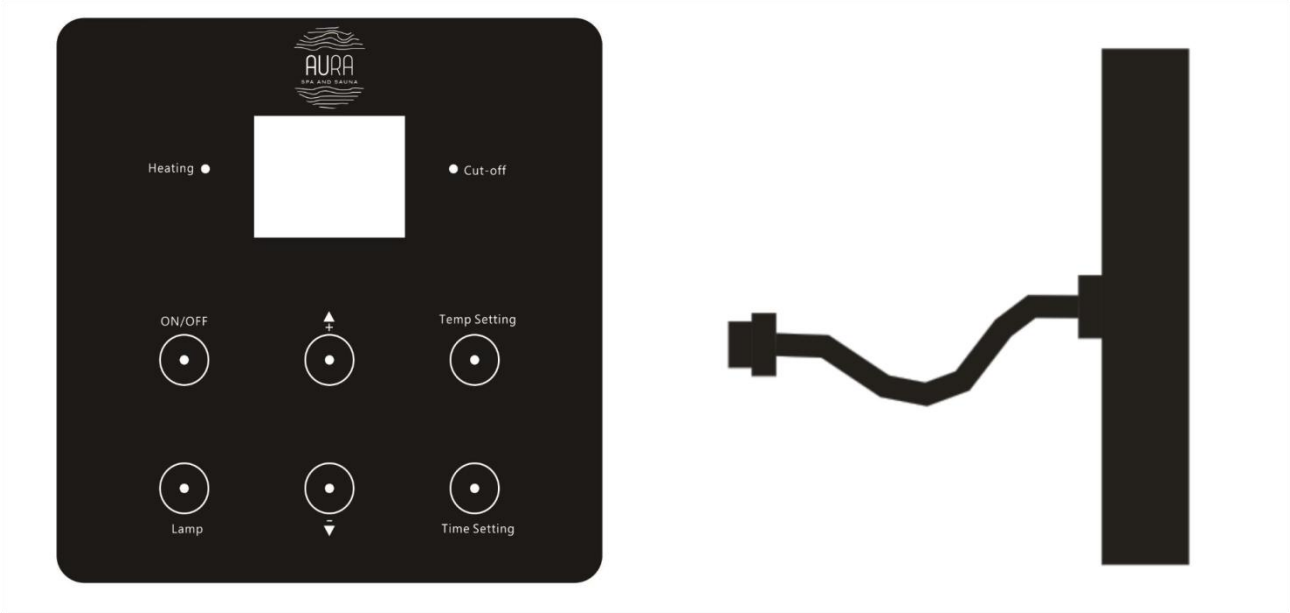

I. ON/OFF

Press 

to switch ON and OFF the system.

Pressing the button from the OFF state to the ON state powers up the sauna heater, the system begins to heat up (if current temperature is lower than setting temperature). Once the temperature arrived setting temperature, the system enters the automatic operating mode.

The system has a memory function, it will remember the last programmed Time and Temperature settings, However, if the system loses power due to a power outage or power off, it will lose all of its memory and will revert to the factory-default Temperature (60℃) and Time (45 minutes). The machine automatically goes through a power-down sequence when the set time lapses OR when the ON/OFF button is toggled to the OFF state, and this process does not interrupt the memory function of the machine.

II. Temperature setting

Press 

to adjust the temperature.

The LCD and the indicate LED on the left will blink, and the LCD will display the previous set temperature or the default temperature. If power to the system was interrupted before being powered ON again, the LCD displays the default temperature 60℃ (140℉). Press the "▲" or "▼" button to adjust.

III. Time setting

Press 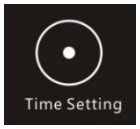

to adjust the working time.

Press "▲" or "▼" button to adjust the operating time to the desired time. Pressing "▲" button continuously until the LCD displays **"CH"** results in the system entering the Continuous Heating/Running mode.

IV. Lamp

This button 

is a Lamp Switch controlling an external light– if connected.

The button can be used as the switch for the external light if the system is connected to the appropriate power supply. The LED is on when the light is turned on. Any externally powered lamp (drawing under 5A) can be switched only.

V. ▲ Button

Increases the temperature or time.

VI. ▼Button

Decreases the temperature or time.

VII. Switch button on the central control box (some models may not have this button)



This button would only be used for switching off power supply temporarily. If you don't use the sauna control system or sauna heater for a long time, please make sure the main power supply is cut off.

Attention: if this button has been switched off, the control system will lose all of its memory and will revert to the factory-default Temperature (60℃) and Time (45 minutes).

VIII. Resetting the Overheat Protector

If the temperature of the sauna room becomes dangerously high , the overheat protector will permanently cut off the supply of the heater. The overheating protector can be reset after the heater has cooled down. Please check that the stones are piled properlyand ensure proper air circulation in the room with inlet and outlet vents .

Attention: If the overheat protector cuts off the power supply, please do not reset it immediately as it may damage the normal operation and lifespan of the over-heat protector.

8. Troubleshooting

- The temperature display screen showing "-L" indicates a poor connection (or open circuit) of the temperature sensor or a temperature below 0°C (32℉).
- When the display shows "-H," it signifies a short circuit in the temperature sensor or a temperature exceeding 110°C (230℉). After the temperature cools down, please press the overheat protection switch and inspect the reason for overheating. The overheat protection switch is located inside the temperature sensor box.

Sauna heater will not work in both above conditions, please check temperature sensor connection or temperature of sauna room. And seek for dealer's help if needed.

9. Warranty Policy

(1) The sauna heater (except heating elements) carries a 24-month warranty when installed for home use. For sauna heater intended for home use but installed in public or commercial venues such as communal saunas in apartment complexes, hotels, leisure centers, gyms etc. has its warranty period reduced to 12 months.
(2) The heating element carries a 12-month warranty when installed for home use and a 6-month warranty when installed for public or commercial use .
(3) The controller carries a 24-month warranty when used in a home and carries a 12-month warranty when used in a commercial application.
(4) Warranty period will count from the ex-factory date of the sauna heater.
(5) If the after sales problems are found to be caused by the user's failure to perform regular maintenance on the machine, the warranty will be null and void.
(6) Limited free warranty only includes us providing free spare parts and our remote services; and does not include any other direct or indirect costs / losses.
(7) Limited warranty is offered to all customers.
(8) Our company has the right to decide whether to repair or to replace a part. Approval must be obtained from our company before shipping back a product. The customer bears transportation fees and any parts fee (when applicable) in advance.
(9) This warranty does not cover any damages, malfunction or failures caused by, or resulting from unauthorized installation, maintenance and repair, improper power supply etc.
(10) Damage caused by accident, misuse of chemical products or any other reasons which are beyond our company’s control will not be covered. Any product whose label, nameplate has been removed, altered, damaged is not covered either.
(11) Use in a high salinity or any other extreme corrosive environment is not covered by the warranty.
(12) After the warranty period lapses, support services are still available to our customers when all costs are covered by the customer.
(13) The buyer must report any faults and malfunction of the product immediately or within 14 days of their appearance. The report can be made to the manufacturer, the supplier, or an installation company authorized by the manufacturer. Warranty claims must be made no later than 14 days after the warranty period for the product has expired.
(14) The buyer must take good care of the product. **When receiving the product, the buyer must inspect it for damage caused during transport and storage**. Any damage must be reported to the supplier or the delivery company immediately. The manufacturer is not responsible for any issues, malfunction or defect that are the result of transportation or incorrect storage, installation or use not in accordance with the manufacturer's recommendations, neglect of maintenance, or the placement of product in conditions that do not meet the manufacturer's recommendations.
(15) Please contact our company if you need additional information. Thank you.



AURA
SPA AND SAUNA

SPAUNA - MÕNUSA SELTSKONNA JA HEA TUJU MAALETOOJA.