AURA
Steam Generator Manual



DO NOT Overtighten the DRAIN PIPE connections by locking pliers

Please read the manual carefully before installation

All electrical wiring MUST be installed by a qualified licensed electrician in accordance with National Electrical Code and local electrical code.

SPAUNA **info@spauna.ee** **www.spauna.ee**

NOTICE Pictures/drawings for illustrative purposes only

Table of Contents

1. Important Safety Information 1
2. Installation Precautions 2
3. Configuration List 3
4. Parameters 4
    4.1. Models, parameters and dimensions 4
    4.2. Steam generator structure 6
5. Installation 7
    5.1 Installation of the steam generator unit 7
    5.2 Installation of central function box 8
    5.3 Installation of controller and temperature sensor 9
        5.3.1. Installation of Controller: 9
        5.3.2. Installation of temperature sensor 11
    5.4 Installation of pipeline 12
    5.5 Installation of electrical 16
        5.5.1. Power Supply 17
        5.5.2. Wiring diagram 18
6. Functions and Operations 23
    6.1. Controller display 23
    6.2. Auto functions 27
7. Maintenance 29
8. Troubleshooting 31
9.Warranty Policy 32
Appendix: Specifications of our Special Models 33

1. Important Safety Information

As you follow these instructions, you will notice warning and caution symbols. This blocked information is important for the safe and efficient installation and operation of this steam bath systems. These are types of potential hazards that may occur during installation and operation.

- **This document contains important safety, operation and maintenance information. Leave this document with the homeowner. DO NOT discard this document.**
- The information in this manual should be used in conjunction with consultations with an architect, designer and contractor in determining factors necessary in providing a suitable and safe steam room.
- AURA steam generators must be operated with AURA controls and accessories only and are to be installed strictly in accordance with the specific instructions contained in this manual and as supplied in the manuals provided with the controls or accessories.

WARNING Indicates a potentially hazardous situation, which, if not avoided, could result in death or serious injury.

CAUTION Indicates a potentially hazardous situation, which, if not avoided, may result in minor or moderate injury or product damage.

NOTICE It is used to address practices not related to physical injury.

All information in these instructions is based on the latest product information available at the time of publication. We reserve the right to make changes at any time without notice.

WARNING

a. This appliance is not intended for use by a person with reduced physical, sensory, or mental health, or lack of experience and knowledge about its safe use. Proper supervision or instruction on the safe use of this appliance must be delivered before a user is allowed to use this appliance.
b. Children must be supervised when in the Steam Room.
c. Smoking and the consumption of alcohol should not be allowed inside the steam room.
d. Leave the steam room immediately if you experience discomfort.
e. In the event the machine is not going to be used for prolonged periods of time, please switch OFF the steam generator power supply isolator and turn OFF the water supply.

CAUTION

a. Check the steam room before restarting the controller.
b. Please DO NOT attempt to modify or change the intended functionality and purpose of this machine without the expert guidance of a trained and certified engineer who will be responsible for the safety of the machine.

NOTICE

A ventilation fan is recommended for the steam room.

2. Installation Precautions

WARNING

a. No block valve should be installed along the steam pipelines. Strictly no blocked or deformed pipes are to be used, or else we will experience an undesirable backflow of steam. The steam pipelines should be installed with a downward gradient so that any condensation that forms, flows toward the steam diffuser.
b. The steam pipeline must be copper or stainless steel pipes, all other materials such as plastic, acrylic etc. should not be used since they cannot sustain 150℃ or higher temperature.
c. DO NOT directly drain into the steam room, as water from the water tank is very hot and may seriously burn the user.
d. The steam head is hot. DO NOT touch the steam head and avoid the steam near the steam head.
e. GFCI must be installed on the power supply and the power supply, power cable, fuse and breaker must comply with the nameplate on the unit and table 2 in this manual.

CAUTION

a. If the generator is installed in a difficult to access location, the water supply turn-off valve should be made easily accessible in case of emergencies.
b. The solenoid valve can endure a maximum water pressure of 0.8MPa (8kg/cm^2). To protect the solenoid valve from extremely high water pressure, please turn down the inlet slightly or install a water pressure relieving valve.
c. Please dredge and clean all the pipes before installation.
d. The steam generator should be installed indoors. It should be leveled and with the arrows pointing upwards.
e. All inlets and apertures should be sealed to prevent any leakage of steam and to protect the user and the generator.
f. All inlet water pipelines and steam pipelines should be installed per the prevailing Local National Standards and Code.
g. The wet surfaces of steam enclosures may be slippery. Use care when entering or leaving. To prevent slip and fall hazards, non-skip strips must be installed on the steam room floor.

NOTICE

a. It is recommended that a gasketed door is used for steam containment.
b. The ceiling should be sloped to prevent dripping of condensate.
c. Provide a floor drain for condensate gravity drainage.
d. Windows that are part of the steam room should be double paned and tempered safety glass.

3. Configuration List

After you unpack the steam generator, please check to make sure the following accessories are in the box. Please contact us immediately if any item is missing.

Item Name	Pictures (All pictures are for illustration only, the items are subject to the actual product)	Quantity
1. Steam generator		1pc
2. Central function box		1pc
3. Central function box power cord		1pc
4. Controller (white/black)		1pc
5. Auto drain valve		1pc
6. Controller cable 5m (central function box ---> controller)		1pc
7. Temp. sensor with 5m cable (central function box ---> sensor end position)		1pc
8. Central function box 12 - core cable (steam generator ---> central function box)		1pc
9. Steam head		1pc for 3~16.5kw 2pcs for 18~24kw
10. Safety valve		1pc
11. User Manual		1pc

Table 1

4. Parameters

4.1. Models, parameters and dimensions Table 2 (Only applies to European power standard)

Model	Power	Phase	Heating elements	Voltage/Current	Power wire	Breaker	Room volume with heat insulation	Dimension (L*W*H)
	KW	N	N*KW	V/A	N*mm2	A	m3	mm
AURA-30	3.0	1	2*1.5	215-240/13.6	3*2.5	16	2～3	418*150*317
AURA-40	4.0	1	2*2.0	215-240/18.2	3*2.5	25	3～5	
AURA-45	4.5	1	3*1.5	215-240/20.5	3*2.5	25	3.5～5.5	
		3		380-415/6.8	5*1.5	16		
AURA-50	5.0	1	2*1.5+1*2.0	215-240/22.7	3*2.5	32	4～6	
		3		380-415/7.6	5*1.5	16		
AURA-60	6.0	1	3*2.0	215-240/27.3	3*4.0	40	5～7	
		3		380-415/9.1	5*1.5	16		
AURA-70	7.0	1	2*2.5+1*2.0	215-240/31.8	3*6.0	40	5.5～8	
		3		380-415/10.6	5*2.5	16		
AURA-75	7.5	1	3*2.5	215-240/33.75	3*6.0	40	6.5～9	
		3		380-415/11.25	5*2.5	16		
AURA-90	9.0	3	6*1.5	380-415/13.6	5*2.5	16	8～11	490*174*397
AURA-105	10.5	3	3*1.5+3*2.0	380-415/15.9	5*2.5	25	9～12	
AURA-120	12.0	3	6*2.0	380-415/18.2	5*2.5	25	11～14	
AURA-135	13.5	3	3*2.0+3*2.5	380-415/20.25	5*2.5	32	12～15	
AURA-150	15.0	3	6*2.5	380-415/22.7	5*2.5	32	13～18	
AURA-165	16.5	3	3*3.0+3*2.5	380-415/24.75	5*4.0	32	14～20	
AURA-180	18.0	3	9*2.0	380-415/27.3	5*4.0	40	16～22	511*174*472
AURA-195	19.5	3	6*2.0+3*2.5	380-415/29.5	5*4.0	40	18～24	
AURA-225	22.5	3	9*2.5	380-415/34.1	5*6.0	60	20～26	
AURA-240	24.0	3	6*2.5+3*3.0	380-415/36.4	5*6.0	60	22～30	

NOTICE The rated power is specified for single phase 230V 50Hz; therefore, the actual operating power under single phase 215-240V, 50/60Hz or three phase 380-415V, 50/60Hz may be different from the rated power.

How to choose the right KW steam generator?

Step One: Calculate the volume of the steam room (m^3) = (Length*Width*Height) in meters.
(1 feet = 0.3048 meter, 1 inch=0.0254 meter)

Step Two: Verify your steam room finishing material used.

- If acrylic, steam generator KW= steam room m^3
- If ceramic tile, steam generator KW= 1.30 X steam room m^3
- If all glass tile or glass block walls, steam generator KW= 1.35 X steam room m^3
- If porcelain tile, steam generator KW= 1.6 X steam room m^3
- If natural stone tiles up to 1/2″, steam generator KW= 2 X steam room m^3
- If natural stone slabs over 1/2″, steam generator KW= 2.25 X steam room m^3
- If exterior wall, for one, multiply by 1.1, for two, multiply by 1.2.
- If ceiling height: for a 2.7 meters ceiling, multiply by 1.15; for a 3 meters ceiling, multiply by 1.3.
- If there is a skylight or outside window, select the next larger generator.
- Skylight or window must be double-panel and sealed.
- For optimum performance, ceiling height should under 2.4 meters.

Controller model	Pictures	Controlling time range (minutes)	Temperature display range	Temperature controlling range	Dimension (mm)
AURA		1~60 or long-term (CH)	6~60℃ (43~140℉)	35~60℃ (95~140℉)	103*103*23

Table 3

NOTICE

- While the touch screen controller can be installed inside the steam room, we recommend that you install the controller outside the steam room to extend its service life.

4.2. Steam generator structure

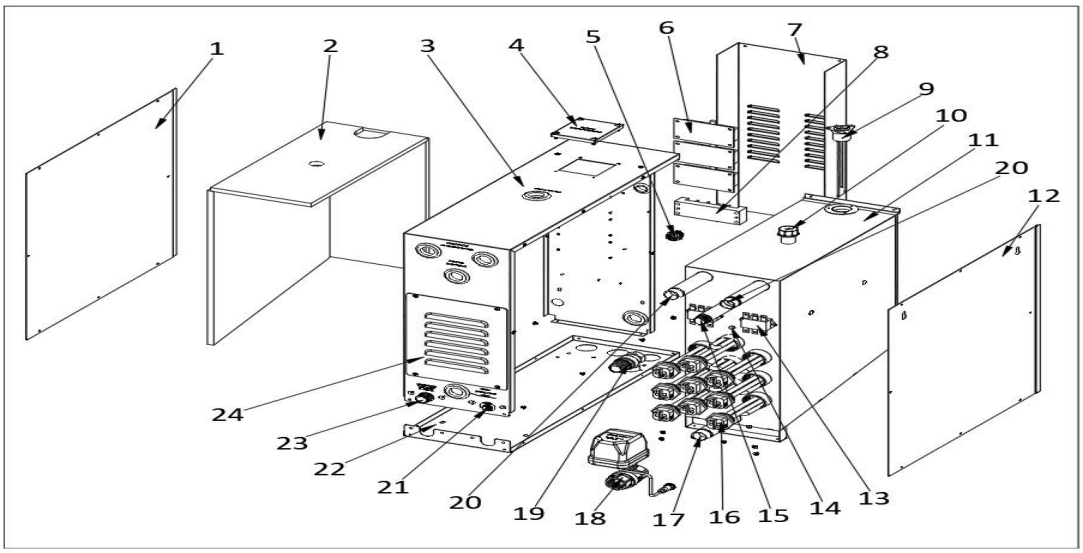

Figure 1

1. Front Cover
2. Thermal Insulation
3. Main Frame
4. Water Level Sensor Service Hole
5. 12-pin Connector (steam generator to central function box)
6. Relay Board
7. U-shape Cover
8. Terminal Board
9. Water Level Sensor
10. Service Hole (1/2'')
11. Water Tank
12. Back Cover
13. Over-Heat Protection Switch
14. Temp. Sensor for Water Tank
15. Safety Valve Connector (1/2'')
16. Heating Element
17. Drain Outlet (3/4'')
18. Drain Valve
19. Safety Valve
20. Steam Outlet
21. Connector for Drain Valve Power Supply (DC-12V)
22. Base
23. Water Inlet Valve
24. Service Hole for Heating Element



Figure 2

NOTICE The #1 plate and #12 plate are interchangeable to change the directions of the steam generator.

5. Installation

CAUTION DO NOT overtighten ALL the pipes connections by locking pliers to avoid leakage.

CAUTION Before installation, please read all the precautions listed on page 1&2.

5.1 Installation of the steam generator unit

WARNING

- Switch off all power supplies before commencing installation.
- DO NOT install the steam generator inside the steam room, a shock hazard will occur.
- DO NOT install the steam generator outdoors, in wet/moist, freezing or wherever environmental conditions may result in a shock hazard or affect the performance of the steam generator.
- DO NOT install steam generator or plumbing lines in an unheated attic or any locations where water could freeze and cause pipes to rupture and cause property damage.
- To prevent damage to the steam generator or a fire hazard, DO NOT install the steam generator near flammables, corrosive materials or chemicals such as gasoline, paint thinners or the like. Installation in areas having high concentrations of chlorine (such as a pool equipment room) must be avoided.
- Be aware of the potential hazards associated with high temperatures attained in the pressure steam output pipeline and the over pressure safety valve.
- To prevent scald: steam piping, safety valve, drain valve and plumbing will become hot during operation and remain hot after shutting down for a period of time. Please provide appropriate protection, including insulating plumbing lines. Avoid plumbing runs and steam head locations that can come in contact with bathers.

CAUTION

- The steam generator must be leveled when installed.
- The steam generator should be installed in a dry and well ventilated place. It can be installed either on the wall or on the ground and must be secure. Install the generator as close to the steam room as possible, such as in a closet, under a wash basin or in the basement right below the steam room.

Installation

i. To install the steam generator on the wall: drill two 8mm diameter holes into the wall, insert the expansion screws and then hang the steam generator on those screws.

ii. To install the steam generator on the ground or deck: install a frame on the site and then screw the steam generator into the frame.

iii. For ease of service and maintenance, please install the steam generator with the nameplate facing the front and leave more than 300mm space around the steam generator.

5.2 Installation of central function box

- Please hang the central function box on the wall.
- Central function box needs to be powered separately and comes with its own power adapter.
- Use the 12-core cable provided by us to connect the steam generator to the central function box. The central function box should be installed near the steam generator as the 12-core cable is only 100cm long. Please note that the 12-core cable cannot be extended, only the original factory cable can be used.
- Connect each function equipment (Like aroma pump, coloured lights etc) to the central function box respectively.



Figure 3 Central function box, Size: 18*14*5cm

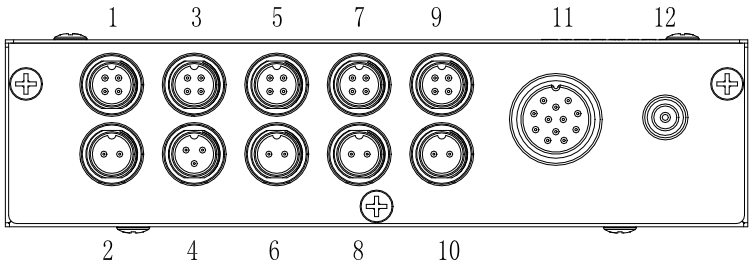

Figure 4 Central function box connectors

1. APP
2. Steam room temperature sensor
3. Controller
4. Steam room humidity sensor
5. Fast steam switch
6. Fan
7. Coloured lights
8. Salt spray generator
9. Aroma pump
10. Descaling pump
11. Connector to the steam generator
12. Power supply 12V DC

NOTES: (explanation of indicators on the main board)

D34: Main board power supply indicator

D39: Relay contact on-off state indicator

D24: Water level detection signal indicator

D18, D19, D20: Heating indicator

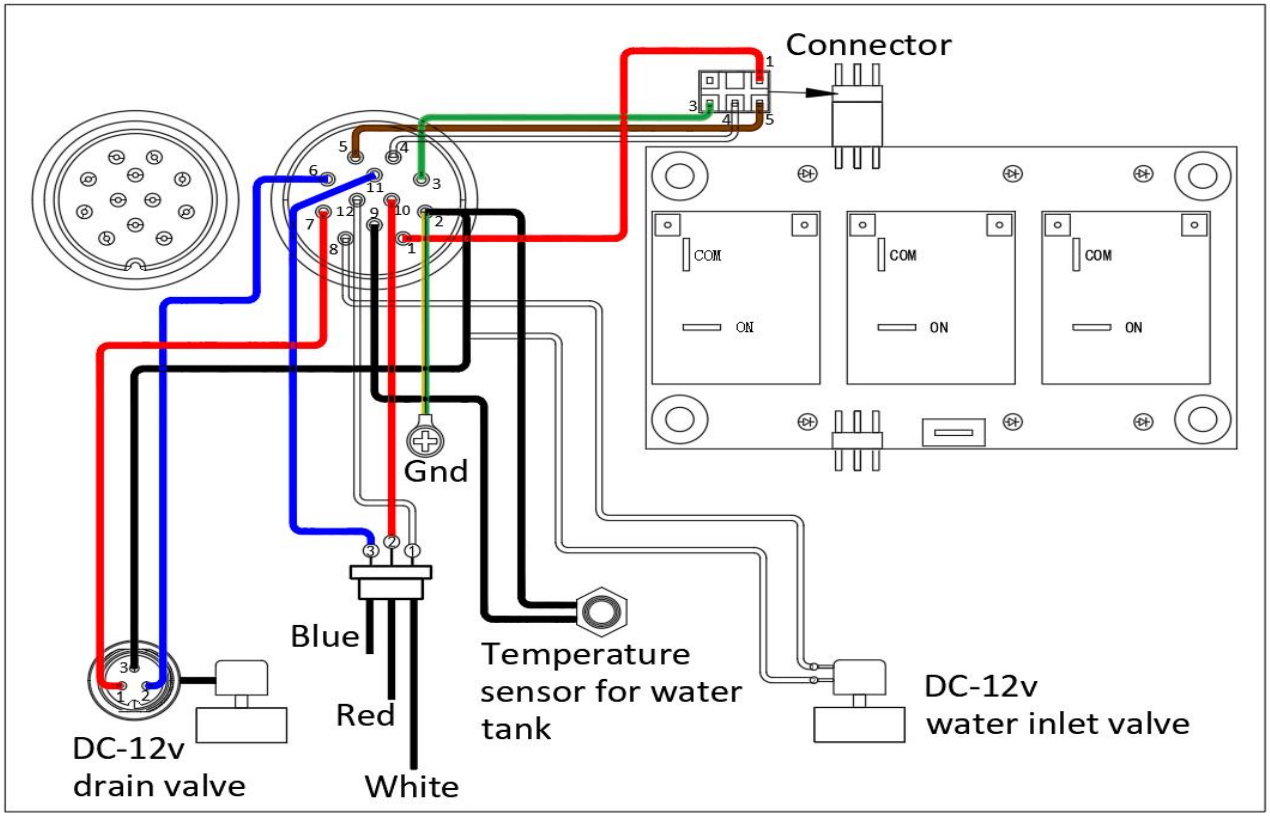

Figure 5 Steam generator 12-core cable socket corresponding functions

5.3 Installation of controller and temperature sensor

CAUTION

- The temperature sensor should NOT be placed near the entrance.
- While the touch screen controller can be installed inside the steam room, we recommend that you install the controller outside the steam room to extend its service life.
- Both the controller and temperature sensor cables can be extended. Please contact SPAUNA technical service if an extension cable is required. **If the electrician installs extended temperature sensor and controller cables without authorization, resulting in the malfunction of the machine, the machine will no longer be eligible for complimentary parts warranty service. Cutting it short is NOT allowed.**

5.3.1. Installation of Controller:

The controller should be installed at a height of approximately 1.2 m; preferably just outside the steam room.

Route the control cable through the conduit (ϕ25mm), with one end connecting to the controller and the other end connecting to the No.3 connector of central function box (Ref to figure 4 & figure 8).

Steps for housing box installation:

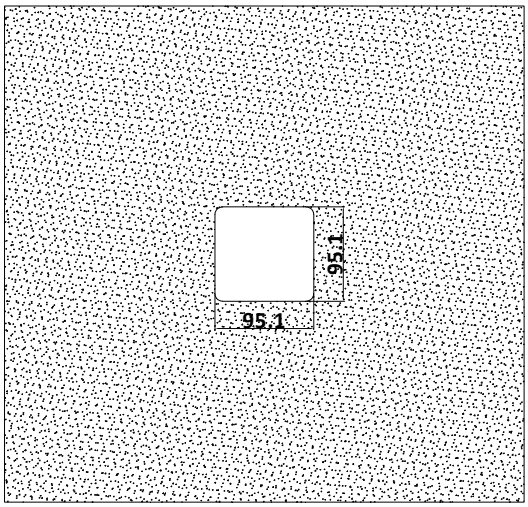

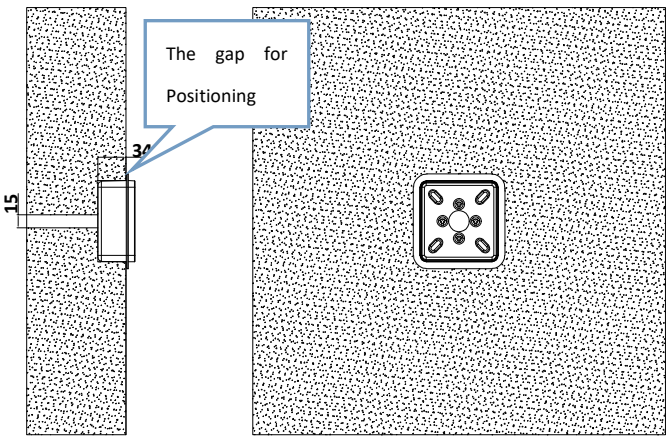

Step 1: Open a 95.1*95.1*34mm hole on wall

Step 2: Insert the housing box to the wall, make the tile to cover the gap

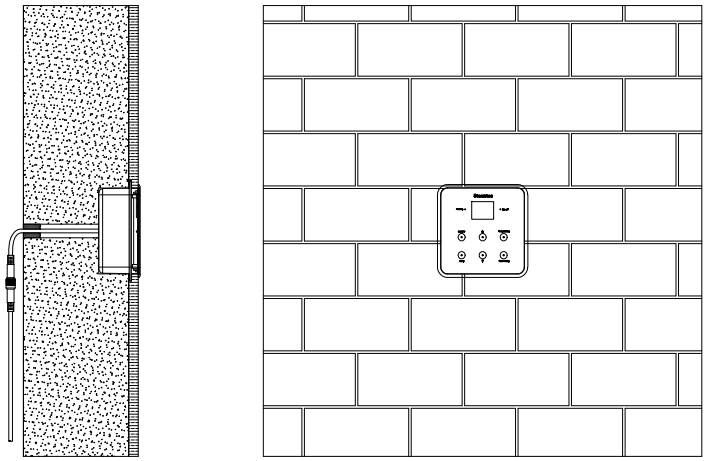

Step 3: Insert the controller into the housing box





Figure 6 Controller installation

5.3.2. Installation of temperature sensor

NOTICE Temperature sensor should be installed inside the steam room but not directly above the steam nozzle, the height should be between 1.6-1.8m from floor.

Route the temperature sensor through the conduit (ϕ25mm) and connect to the No.2 connector of central function box (Ref to figure 4 & figure 8).

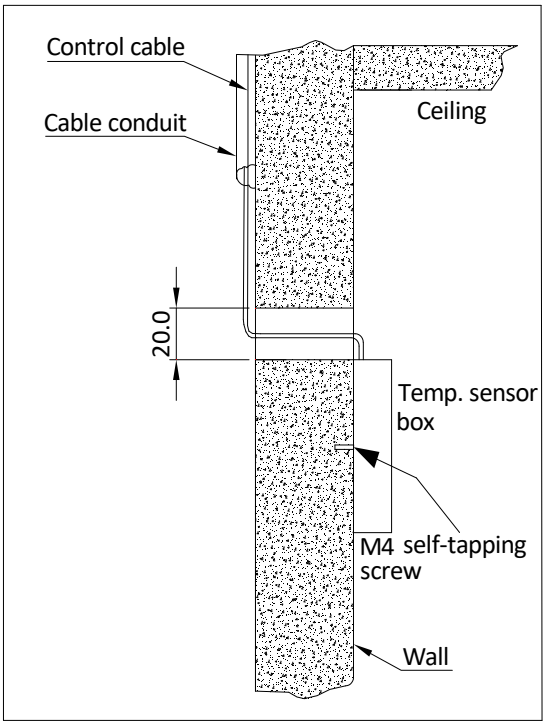

Figure 7 Temperature sensor installation

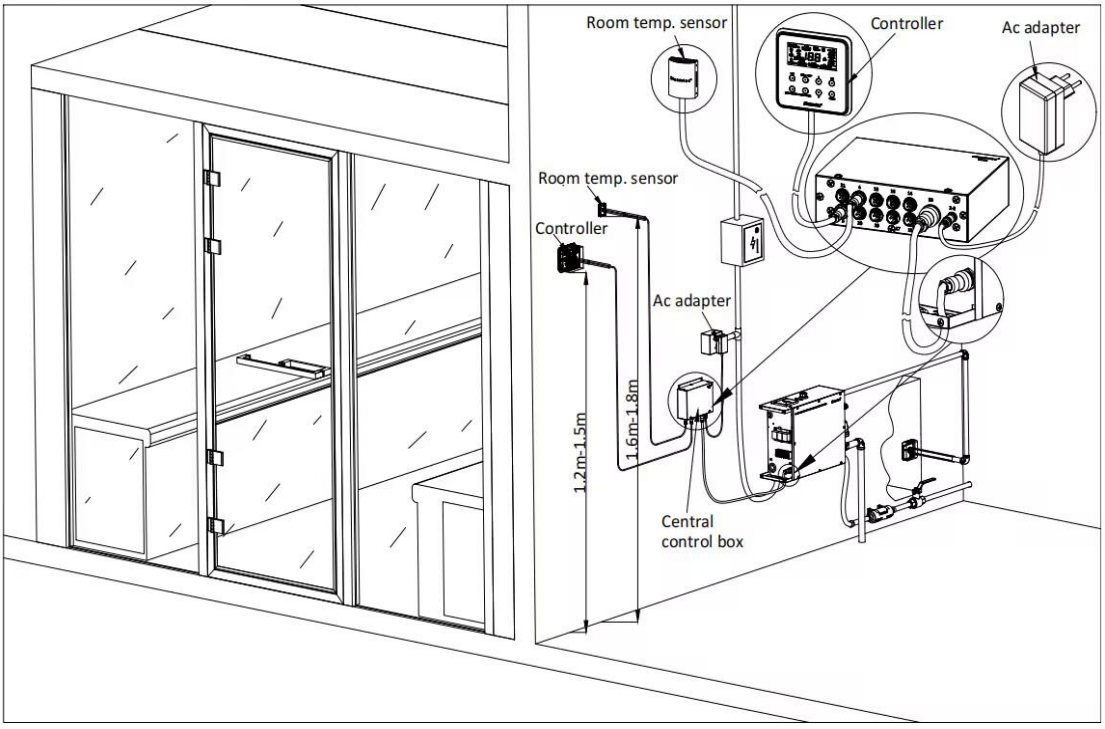

Figure 8

5.4 Installation of pipeline

(Please discard the black lid of ②③④⑤)



3KW ~ 16.5KW

① Service hole 1/2''
② Steam outlet
3KW~7.5KW: 1/2''
9KW~16.5KW: 3/4''
③ Safety valve 1/2''
④ Water inlet 1/2''
⑤ Drain outlet 3/4''
⑥ Power supply for drain valve

Figure 9 3KW- 16.5KW Pipe Connection



18KW ~ 24KW

① Service hole 1/2''
② Steam outlet 3/4''
③ Safety valve 1/2''
④ Water inlet 1/2''
⑤ Drain outlet 3/4''
⑥ Power supply for drain valve

Figure 10 18KW- 24KW Pipe Connection

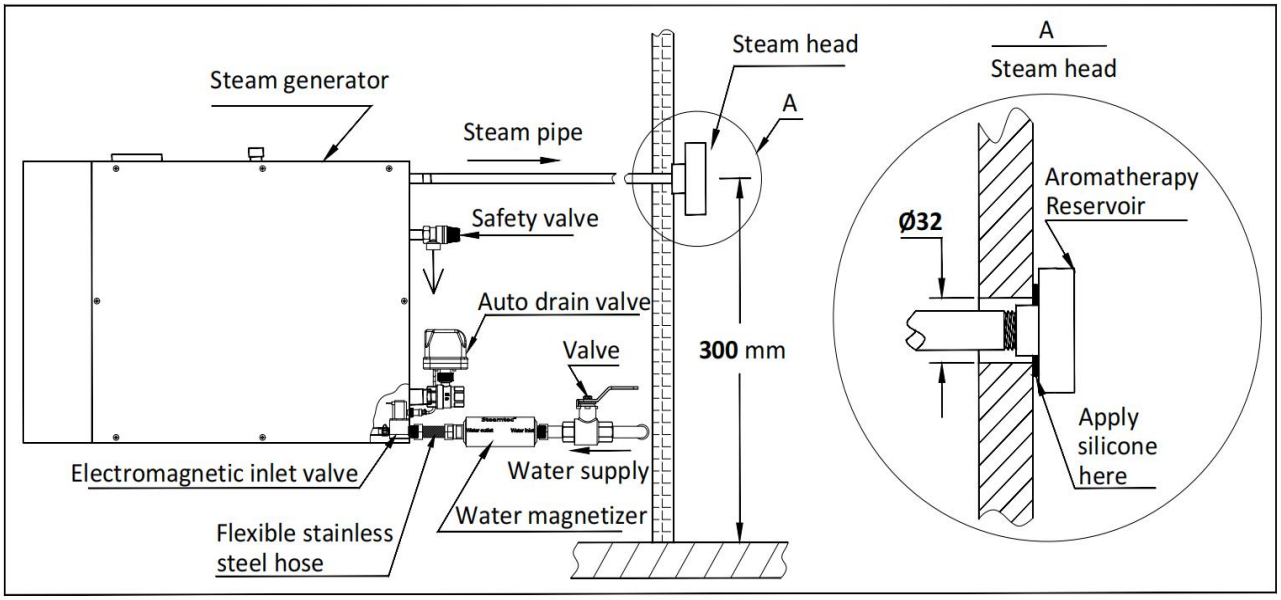

Figure 11

WARNING Water supply and steam piping MUST be flushed to remove flux and other debris prior to connecting the steam generator. Failure to flush the steam piping may result in flux poisoning or a hazardous condition. Failure to flush the steam piping may result in blockage or an inoperable system.

Flush inlet water line thoroughly before making connection to unit.

DO NOT use plastic /acrylic /FRP material pipes for drain outlet or steam outlet.

NOTICE We provide flexible stainless steel hoses. Please contact SPAUNA technical service if it is required. The picture as below:



i. Water inlet

First connect the water magnetizer with holders (if applicable) to the water supply pipeline. Then please use 1/2" flexible stainless steel hose to connect the other side of the water magnetizer to steam generator. DO NOT connect a rigid metal water supply pipeline directly to the machine's water inlet because it may damage it. Always transition it via a flexible stainless steel hose.

CAUTION Only use cold water supply.

Install anti-water hammer device as necessary.

The solenoid valve can endure a maximum water pressure of 0.8MPa (8kg/cm^2). To protect the solenoid valve from extremely high water pressure, please turn down the inlet slightly or install a water pressure relieving valve.

ii. Drain outlet

Please use 3/4'' copper pipe or stainless steel pipe to connect between the drain valve and the drain pipeline of the house. The drain pipeline should be installed with a downward slope so as to help residual water in the steam generator flow down to the drain pipe.

CAUTION DO NOT use locking pliers to overtighten the drain pipe connection. Seal all water leaks by using generous amounts of Teflon tape instead. The water draining out of the steam generator is over 100℃. DO NOT use plastic /acrylic /FRP material pipes.

CAUTION DO NOT connect the drain valve to the steam piping.

iii. Steam outlet

Use copper or stainless steel pipe to connect the steam head and the steam outlet pipe of the generator. Heat isolating methods should be implemented. The pipe should be less than 3 meters long and minimize the number of elbows.

- For 3KW-7.5KW steam generator, steam outlet is 1/2'', please use AT LEAST a 1/2'' steam pipe, must be a stainless steel pipe or copper pipe.
- For 9KW-16.5KW steam generator, steam outlet is 3/4'', please use AT LEAST a 3/4'' steam pipe, must be a stainless steel pipe or copper pipe.
- For 18KW-24KW steam generator, there are two steam outlets. Please use AT LEAST TWO SEPARATE 3/4'' steam pipes. Pipes must be made of stainless steel or copper.

CAUTION You MUST use the pipes in correct size as prescribed here. If the pipe size is smaller than our specification, it may cause sudden and dangerous levels of pressure build up within the generator which will carry significant safety risks.

CAUTION The steam pipelines are suggested to be installed with a downward gradient so that any condensation that forms, flows toward the steam diffuser.

CAUTION Failure to pitch the steam piping as required for condensate to drain, may cause condensate to block the flow of steam. Blocking the steam flow may cause steam pressure to discharge boiling water through the steam head, resulting in a scalding hazard. Blocking the flow of steam may cause steam to discharge through the safety valve, resulting in a scalding hazard.

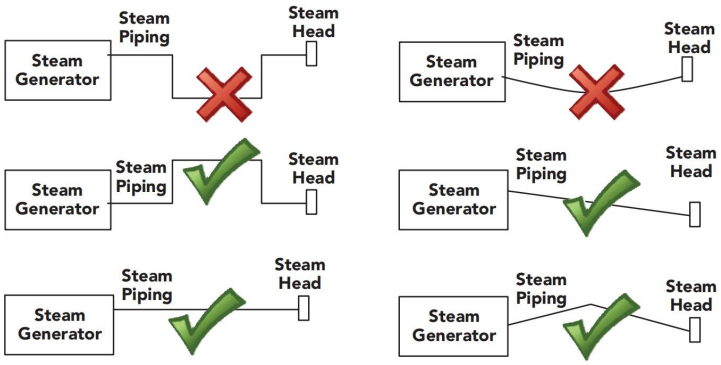

iv. Safety valve

Its purpose is to release excessive pressure build up in the steam generator due to a malfunction.

WARNING DO NOT connect safety valve line, drain line or steam pipe together.

v. Steam Head

The steam head should be placed about 300mm from the ground and at least 150mm from customers' seats. Please apply silicone adhesive on the steam pipe nipple and on the back of the steam head, and then screw the steam head on to the steam pipe nipple. Please refer to figure 12&figure 13, the aromatherapy reservoir should face upwards.

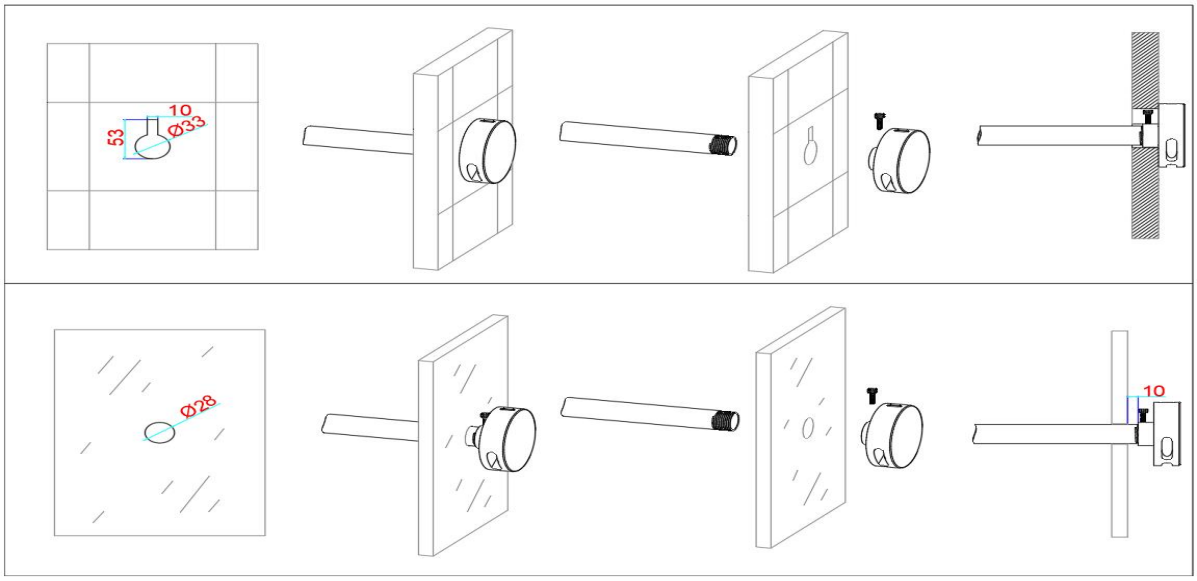

Figure 12 AURA-SH02 steam nozzle installation guide

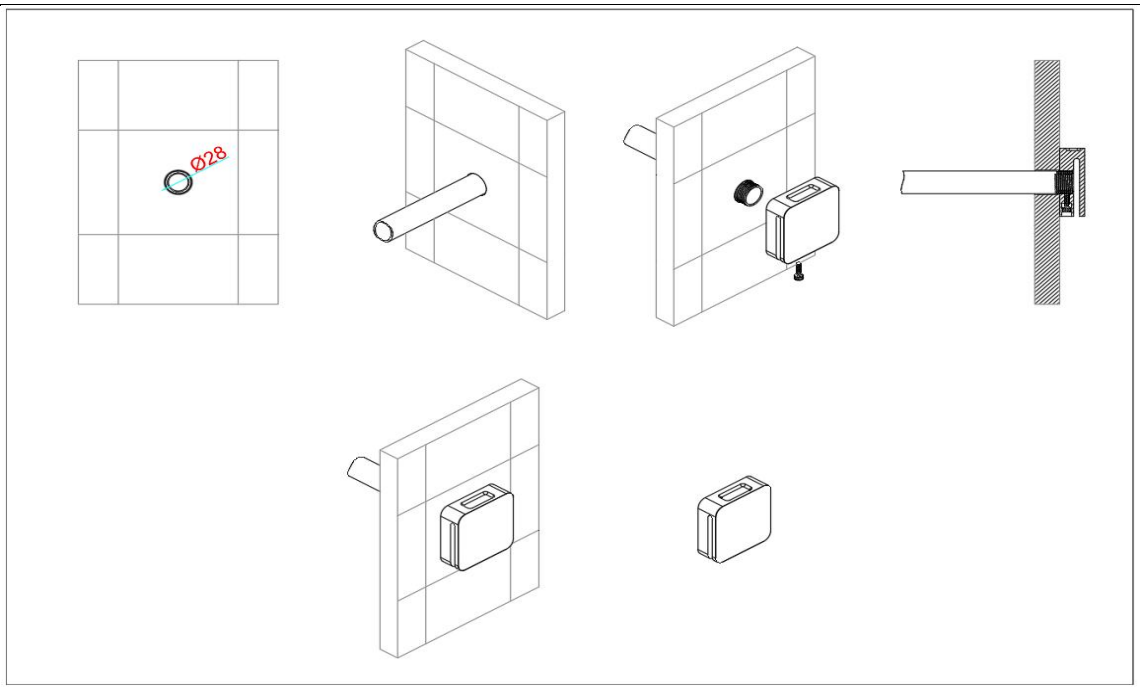

Figure 13 AURA-SH11 steam nozzle installation guide

vi. Service hole

It can be used as the maintenance hole or another steam outlet. Please refer to Section 9 (Warranty Policy) for crucial descaling instructions for your generator.

5.5 Installation of electrical

CAUTION

- All circuits should be installed by licensed electricians and conform to local and national codes.
- Power supply MUST be cut off before installation, maintenance and repair. Pressing the on/off button on the controller does NOT cut power from the power source.
- No unauthorized additions or alterations to the specified and installed wiring is allowed. Never connect the Earth wire to the Neutral wire.
- Only the original AURA components and heating elements are allowed to be used on the machine.
- After the completion of the plumbing and electrical installation, please re-inspect the work done before applying power to the generator and switching it on.
- The generator has been manufactured with great care in our factory and has been inspected and fully performance tested in our factory before shipment to you. Thus site installation of external plumbing and electrical power source wiring to the machine, the installation of and plugging in the controller and the temperature sensor to the central function box are required to be completed.
- The power supply should be 215-240V AC or 380-415V AC, 50/60Hz, please refer to the nameplate of the generator.
- The selection of fuse and breaker must strictly follow the data in table 2.
- Choose suitable power cables specified in table 2 and in conformance with local codes.

5.5.1. Power Supply

Take off the U-shape cover of the generator, route the 3-core power wire (single phase, 215-240V, 50/60Hz) or 5-core power wire (three phase, 380-415V, 50/60Hz) through the hole on the base of generator and connect to the correct terminal. (Refer to figure 14 ~ figure 15)

Single phase, 215-240V AC, 50/60Hz power supply:
Connect the Phase wire to the terminal labelled as **"L2" in the middle**; connect the Neutral wire to the terminal labelled as "**N**" and connect the Earth wire to the terminal labelled as " ".

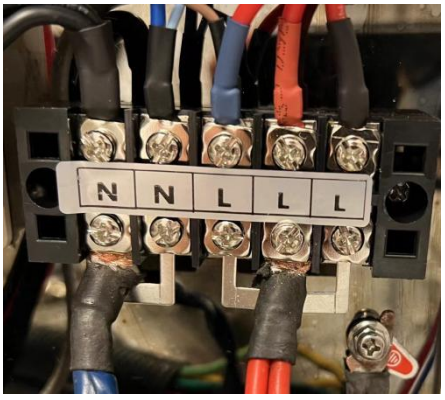

Figure 14 Single phase, 215-240V

Three phase, 380-415V AC, 50/60Hz power supply:
Connect the 3 Phase wires to the terminals labelled as "**L1**", "**L2**" and "**L3**" respectively.
Connect the Neutral wire to the terminal labelled as "**N**" and connect the Earth wire to the terminal labelled as " ".

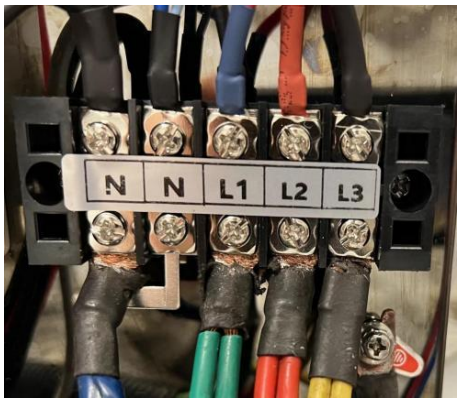

Figure 15 Three phase, 380-415V

NOTICE Please make sure all power connections are well secured by tightening the screws.

5.5.2. Wiring diagram

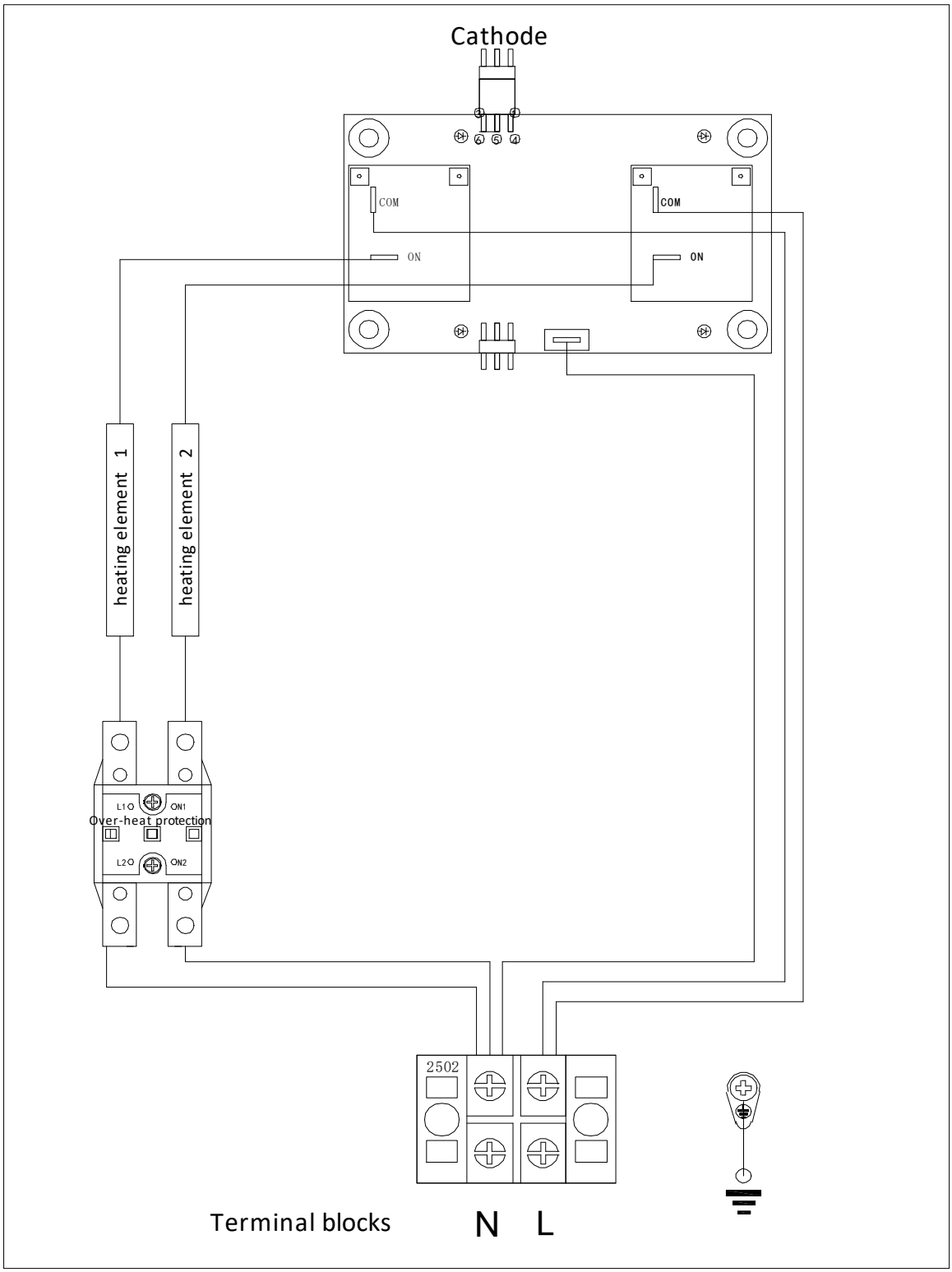

Figure 16 3KW 4KW European 215 ~240V single phase

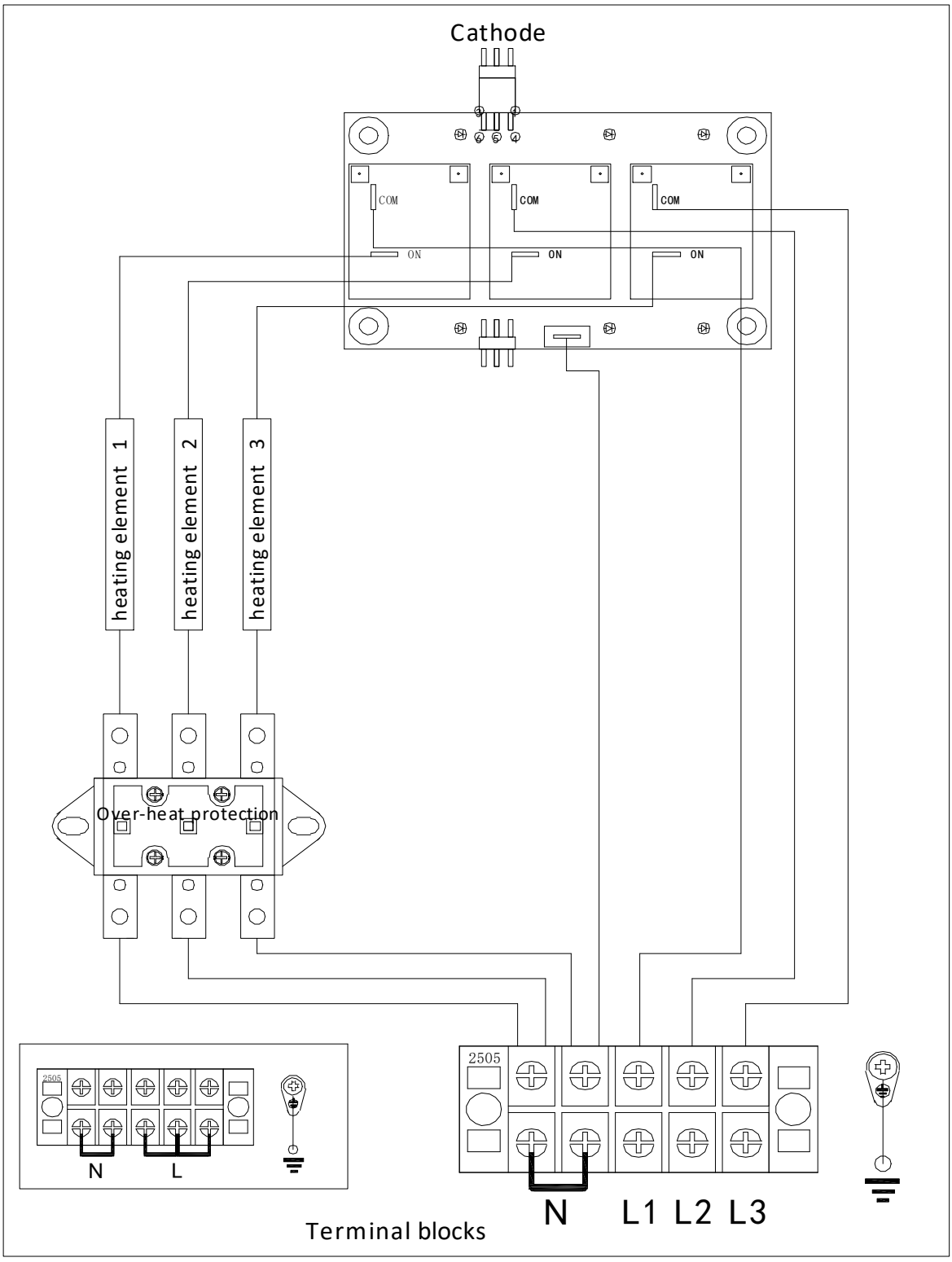

Figure 17 4.5KW 5KW 6KW 7KW 7.5KW European 215 ~240V Single phase or 380 ~415V 3 phase

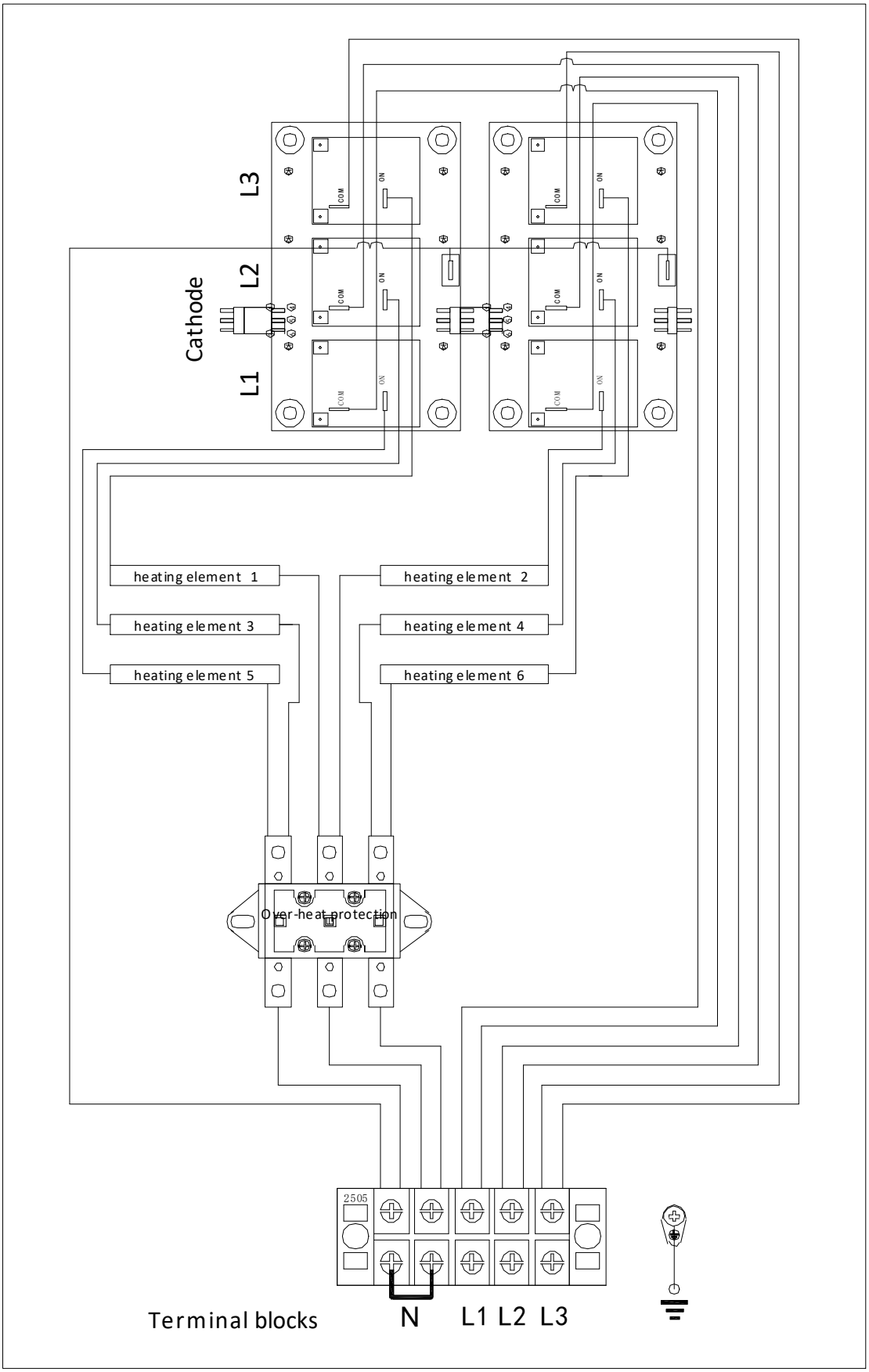

Figure 18 9KW 10.5KW 12KW 13.5KW European 380 ~ 415V 3 phase

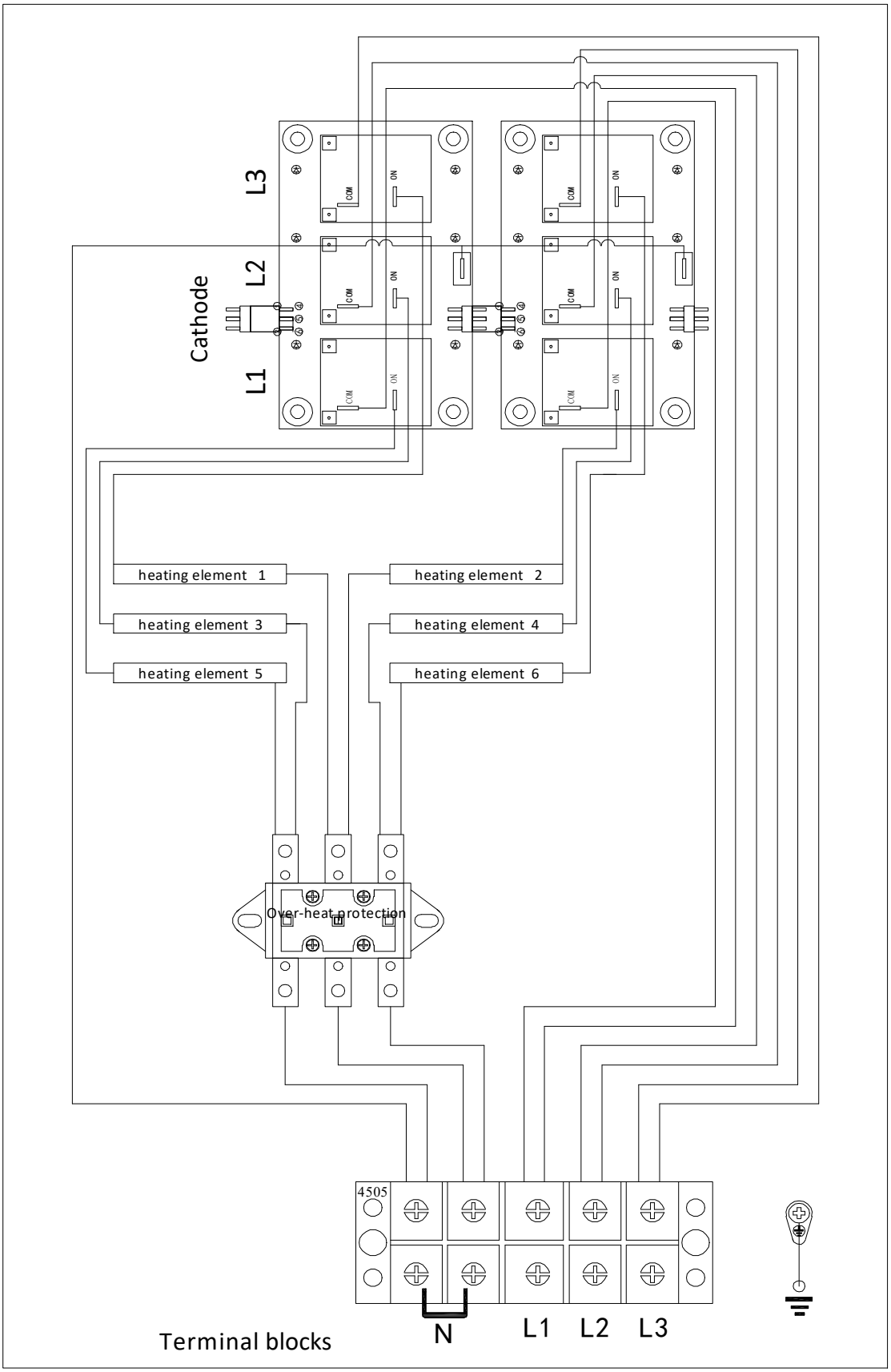

Figure 19 15KW 16.5KW European 380 ~ 415V 3 phase

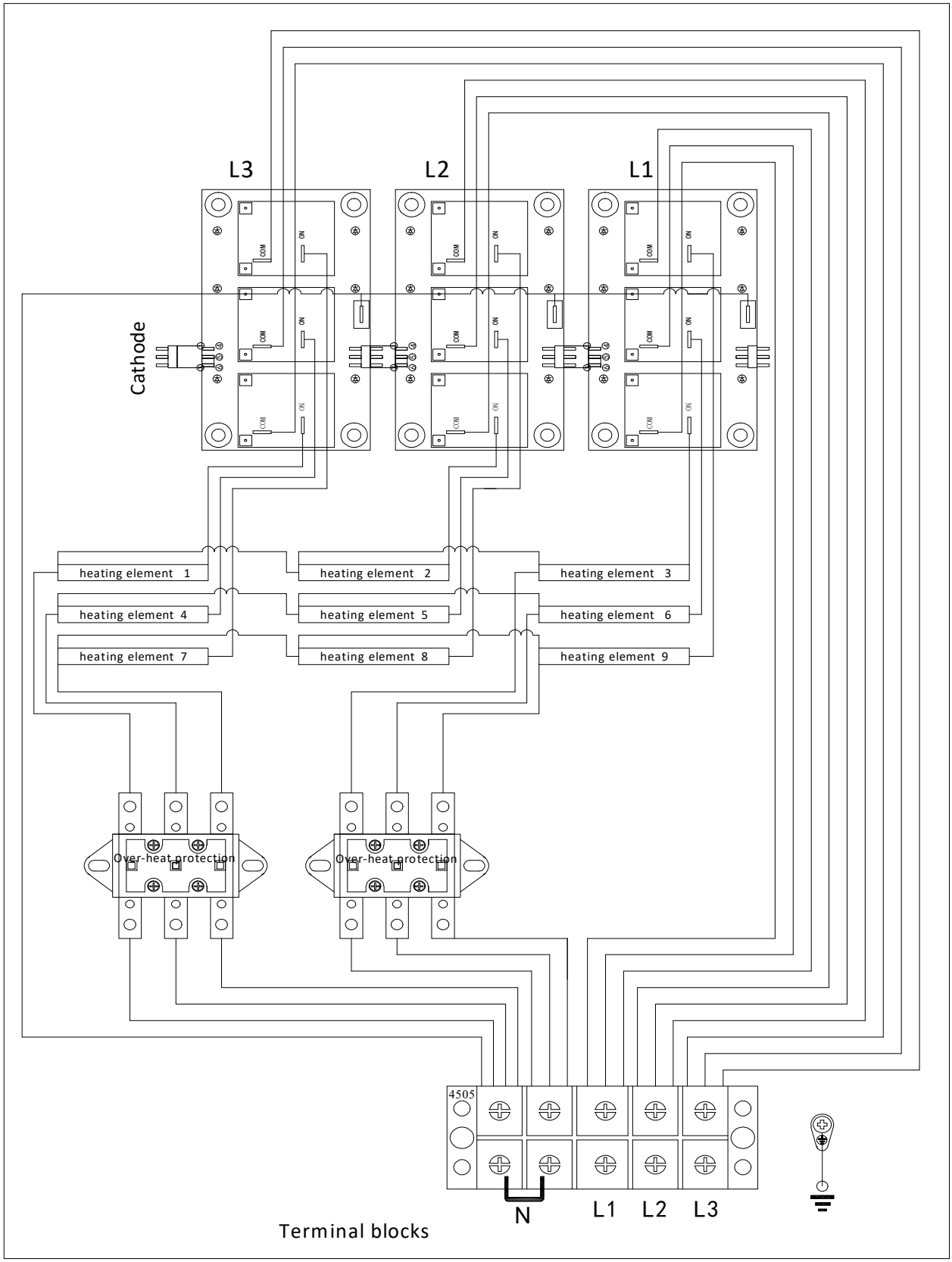

Figure 20 18KW 19.5KW 22.5KW 24KW European 380 ~ 415V 3 phase

6. Functions and Operations

6.1. Controller display

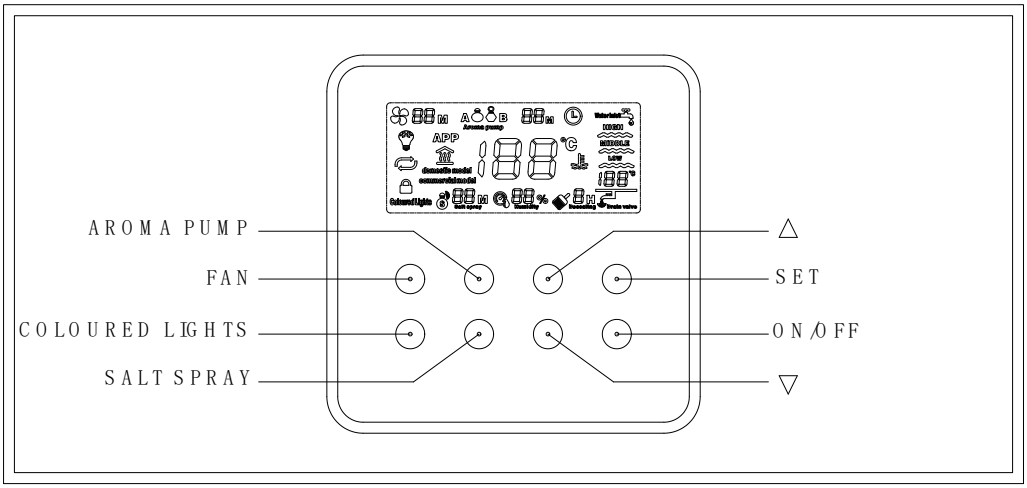

Figure 21 AURA Controller

Each initial touch is to wake up the controller.

Selection key: △ ▽ SET

Function key: FAN, AROMA PUMP, COLOURED LIGHTS, SALT SPRAY, ON/OFF

Working time setting:

- Range: 1~60 minutes or continuous (CH). The default working time is 45 minutes.
- Setting method: touch SET until the cursor on the controller screen moves to "S11", then touch the "▲" or "▼" button to adjust working time.

Temperature setting :

- Range: 35~60°C. The default temperature is 43°C.
- Setting method: touch SET until the cursor on the controller screen moves to "S9", then touch the "▲" or "▼" button to adjust temperature.

The system has a memory function, it will remember the last programmed Time and Temperature settings. However, if the system loses power due to a power outage or switching

off the central function box, it will lose all of its memory and will revert to the factory default Temperature (43℃) and Time (45 minutes). The machine automatically goes through a power down sequence when the set time lapses OR when the ON/OFF button is toggled to the OFF state.

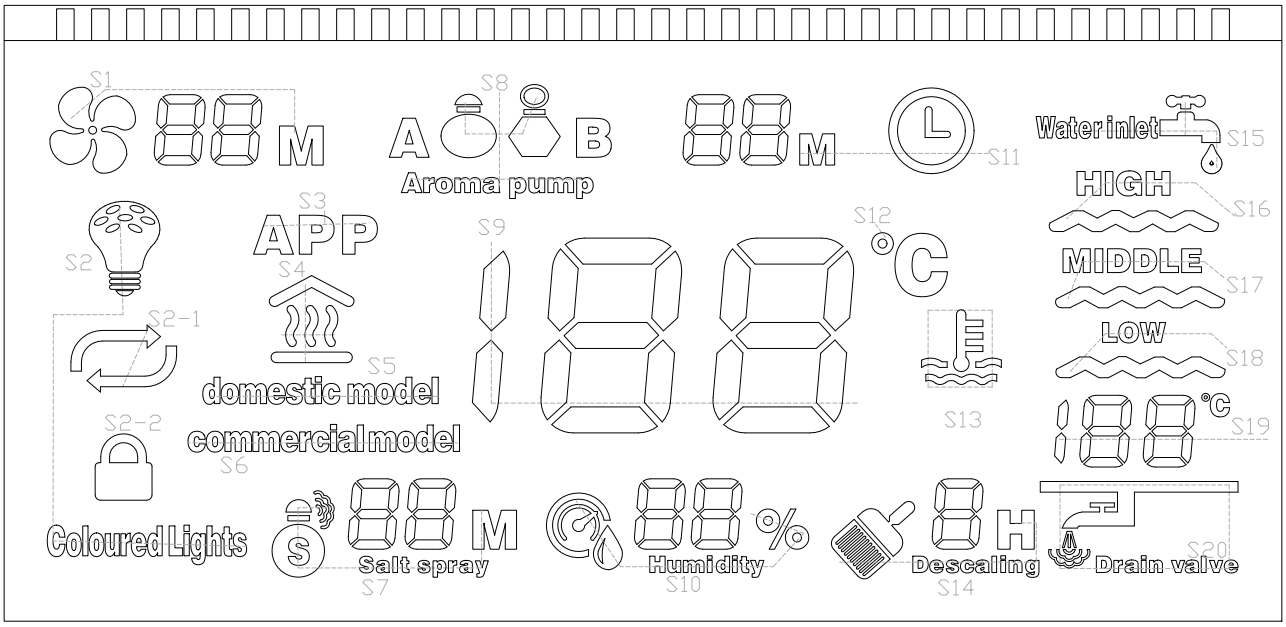

Figure 22 Controller display icon

S1	Exhaust fan	S7	Salt spray	S14	Descaling
S2	Coloured lights	S8	Aroma pump	S15	Water inlet valve
S2-1	Change colors automatically	S9	Temperature instructions	S16	High water level
				S17	Middle water level
S2-2	Lock the color	S10	Humidity instructions	S18	Low water level
S3	APP	S11	Working time	S19	Water tank temperature
S4	Heating instructions	S12	Celsius		
S5	Domestic mode	S13	Heat preservation instructions	S20	Drain valve
S6	Commercial mode				

Table 4

These functions (APP, fast steam, auto descaling pump, auto aroma pump, music, coloured lights, exhaust fan, salt spray, SOS, door control system) have been integrated into the AURA steam generator system, users can enjoy these functions by connecting to the corresponding devices, however, these devices are not included in the standard package, if in need, please contact the dealer. For detailed installation and operation, please refer to the respective instructions for these functions.

S1 Exhaust fan:

FAN

Touch ○ to switch on and off exhaust fan.
The working time range is 1~60 minutes. It will stop working automatically when the programmed time has lapsed. Default time is 5 minutes.
The time showing on the display is the remaining working time.

S2 Coloured lights:

○
COLOURED LIGHTS

Touch to switch on and off coloured lights.
The coloured lights have two operating modes: "Change colors automatically" and "Lock the color", with "Lock the color" being the default mode.

S3 APP: Steamtec Sauna in App Store

Connect the WiFi kit to the central function box well. Ensure that your phone and steam generator's WiFi kit are under the same wireless network (WLAN). Open the App on your phone, and then you can operate the steam generator by your phone now. For more information, please refer to "Steamtec Sauna" App operation guide.
Once your phone is successfully connected to the steam generator, the control panel screen will display "App".

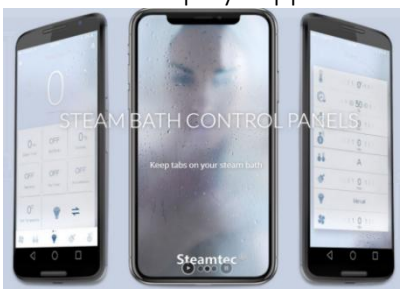

Figure 23

S4 Heating instructions:

Steam generator is heating.

S5 Domestic mode:

Steam generator is under domestic mode. (Change to commercial mode, please cut off the general power supply, then switch the button inside the central function box).

S6 Commercial mode:

It is special for commercial place like spa center or sauna center. In commercial mode, the water temperature in the tank is maintained at around 80°C, referred to as "standby". Press the "fast steam" controller and steam will come out in 30 seconds, after the operating time ends, it returns to "standby" mode.
Steam generator is under commercial mode. (If switch to domestic mode, please cut off

the general power supply, then switch the button inside the central function box).

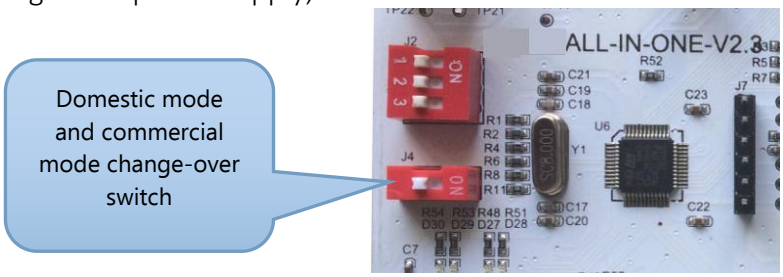

S7 Salt spray:

Touch 

to switch on and off salt spray.

Working time is 1~60 minutes and " CH "(non-stop). The default working time is 30 minutes.

S8 Aroma pump:



Touch to switch on and off aroma pump.

There are two pumps for two types of aroma oils, with pump A being the default.

Only one pump operates at a time. Its operating mode is: working 5 seconds then waiting for 5 minutes, repeatedly. The operating mode cannot be adjusted. If you like a stronger scent, simply restart the process.

S9 Temperature instructions:

S9 displays the temperature measured by room temperature sensor.

S10 Humidity instructions: (not in standard equip)

S10 Humidity default value is 60%. Setting range is 60~99%. Adjust it by 

.

If without humidity sensor, the operation of steam generator depends on the temperature sensor. If with humidity sensor, whether the humidity or temperature reaches the setting value, heating elements will stop working. If temperature drops below the setting value and humidity is more than 6% below the setting value, steam generator will start to heat again. If no need humidity sensor, please pull out it from the central function box, and switch off the central function box and restart.

S11 Working time:

The time showing on the display is the remaining working time.

S12 Celsius:

S12 shows the steam room temperature in degree Celsius.

S13 Heat preservation instructions:

The appearance of the S13 icon indicates that the room temperature reaches the setting value, all heating elements stop working, and the steam generator enters a heat preservation state.

S14 Descaling:

The time can be set from 0 to 8 hours. 0~3 hours is not available for descaling mode. “0” means immediate automatic draining. “1~3” hours means waiting time for drainage, without descaling function. “4~8” hours is descaling mode. Under “4~8” hours, after steam generator is off, descaling liquid will be pumped into water tank automatically for soaking. For example, if set to 6 hours, it will soak with descaling liquid for 6 hours. After the 6-hour countdown, steam generator will start to drain, flush and then turn off.

S15 Water inlet valve:

S15 icon means steam generator is filling with water.

S16 High water level:

S16 icon means the water in tank reaches high level.

S17 Middle water level:

S17 icon means the water in tank reaches middle level.

S18 Low water level:

S18 icon means the water in tank reaches low level.

S19 Water tank temperature:

S19 icon shows the water tank temperature. If the " OH " icon appears, it means overheating, please contact the dealer to find out the reason.

S20 Drain valve:

S20 icon means it is draining now.

6.2. Auto functions

i. Auto filling

Once the system is started, water inlet valve will open and fill water automatically until the water level reaches the highest level. If lacking of water, all heating elements will stop working. If the screen displays “ 

”, it means water is filling.

ii. Auto heating by section/s

The steam generator continuously compares the measured room temperature with the set temperature and automatically determines the number of heating elements that should work.

iii. Auto water supplementing

If the water level is lower than the desired level while operating, auto water supplementing function switches on. Once the water level reaches the desired level, auto water supplementing function switches off. If the water level is lower than the desired level for some minutes, all heating elements will stop working.

iv. Auto drainage and auto wash

When the programmed time has lapsed OR when the ON/OFF button is pressed to the OFF state, the system will drain automatically and 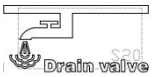

icon will appear on the control panel. The drainage valve will be turned on to drain. After a short while the system will open the inlet valve to fill in water in order to wash and cool down the inner tank and heating elements. The whole process takes about 2.5 minutes, then the system will be shut off automatically after drainage.

7. Maintenance

- **Disconnect all in-coming power to the machine before carrying out any maintenance.**
- Check if all pipes using are in correct size, please refer to **Installation of pipeline**.
- Since plumbing leaks or clogged steam pipes and diffusers can be both damaging and dangerous, please check for and rectify leaks and clogged pipes when carrying out routine preventative maintenance of the machine.
- Clean the solenoid valve, magnetizer and all the pertinent components in the water supply pipeline regularly - commensurate with local water quality and frequency of usage of the steam generator.
- Use soft towel to clean the controller.
- Use soft towel to clean the steam generator body.
- Use soft towel to clean the temperature sensor and box.
- The steam nozzles can be cleaned with mild soap solution.
- When operating, check the equipment for signs of over-heating and check for corrosion of critical electrical and mechanical components.
- **Test the equipment for proper operation after maintenance procedures are completed.**
- **Equipment maintenance must be performed by professionals.**
- Do descaling (there are heating elements and water level sensor inside) regularly.

How often to do descaling?

Hardness	PPM	dH	Mg/l
Very soft	0 to 60 ppm	0 to 4 dH	
Soft	60 to 119 ppm	4 to 8 dH	0-19 mg/l
Medium hard	120 to 179 ppm	8 to 12 dH	20-50 mg/l
Hard	180 to 239 ppm	12 to 18 dH	51-120 mg/l
Very hard	240 to 500 ppm	18 to 30 dH	121-174 mg/l
Extremely hard	over 500 ppm	over 30 dH	>175 mg/l

< 4° dH, very soft water, descaling after 500 hours of use.
> 4° dH, soft water, descaling after 100 hours of use.
> 8° dH, medium hard water, descaling after 50 hours of use.
>12° dH, hard water, descaling after 30 hours of use, installation of a water-softener is recommended.
> 18°dH, very hard and extremely hard water, must install a water purify system. Otherwise, the heating elements will no longer be eligible for warranty service.

NOTICE **Please test your water TDS before installation and keep the data for your future descaling reference.**

What can be used for descaling?

Disincrustant (Citric Acid) for coffee or water dispensers can be used.

How to operate machine for descaling?

➢ If with the auto descaling pump, please refer to the auto descaling pump manual.

Our AURA steam generator has an automatic descaling system, which makes the descaling process simple and convenient. But this is not included in the standard package, and if needed, you can contact the dealer.

➢ If without the auto descaling pump, please refer to below procedure.

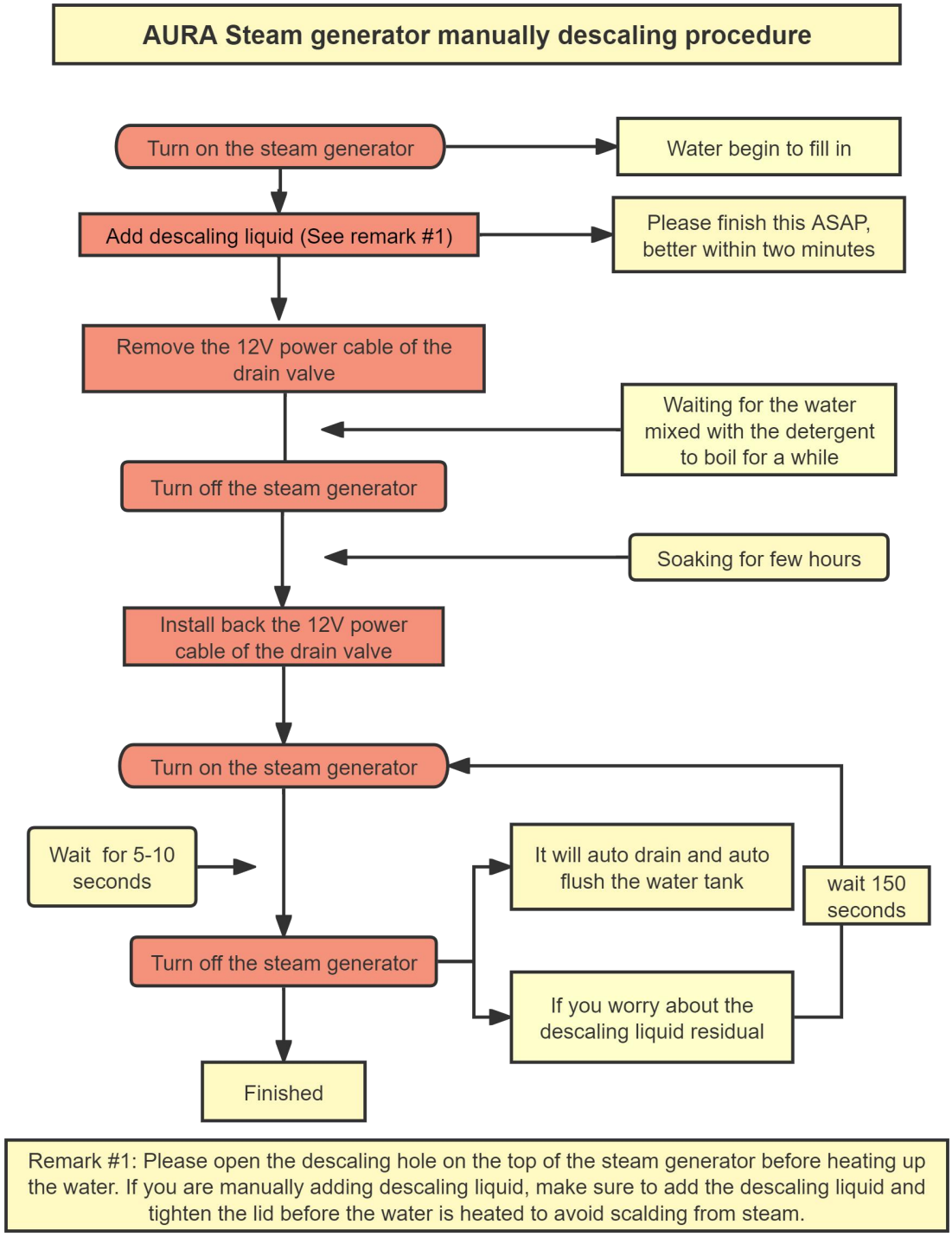

8. Troubleshooting

Repair can only be performed by qualified professionals. For technical assistance please contact your AURA dealer.

The AURA steam generator has self-diagnose functionality built in and some common fault codes will be displayed on the LCD panel if they occur.

Code	Meaning	Diagnose and Solution
-L	Temperature measured by the room temperature sensor is below 6℃	Check whether the room temperature is below 6 ℃, the code should disappear after the room temperature reaches 6 ℃. Otherwise check the connection of the sensor.
-H	Temperature measured by the room temperature sensor is higher than 60℃	Check whether the room temperature is above 60 ℃, the code should disappear after the room temperature drops below 60 ℃. Otherwise check the connection of the sensor.
OH	Temperature measured by the water tank temperature sensor is higher than 120℃	Contact dealer

Table 5

If above methods cannot solve your problem, please contact your dealer or us and provide below information:

1) Detailed description of the problem: if there is water filling into the tank? If there is steam produced etc.
2) Pictures or videos of the relay board when powered on.
3) Pictures or videos of the main board (inside central function box) when powered on.
4) Pictures or videos of the control display when powered on.

WARNING **Switch off the Power Isolator before disassembling the machine.**

- A manual resetting 110℃ temperature control switch is installed in the steam generator for over-heat protection. If temperature of inner tank exceeds 110℃, the switch will automatically disconnect power supply to heating elements. In the event this occurs, it is necessary to disconnect all power supplied to the steam generator and wait for the generator to completely cool down. Then carefully check all heating elements, water level sensors, relays on the sub-board and the water supply pipeline. The temperature switch should only be manually reset after the fault has been located and cleared.

9.Warranty Policy

(1) The steam generator (except heating elements) carries a 36-month warranty when installed for home use. For steam generators intended for home use but installed in public or commercial venues such as communal saunas in apartment complexes, hotels, leisure centers, gyms etc. has its warranty period reduced to 12 months.
(2) The heating element carries a 12-month warranty when installed for home use and a 6-month warranty when installed for public or commercial use under water purification system and timely maintenance.
(3) The touch screen controller carries a 24-month warranty when installed outside the steam room and carries a 12-month warranty when installed inside the steam room.
(4) The optional function devices (APP, fast steam, auto descaling pump, auto aroma pump, music, coloured lights, exhaust fan, salt spray, SOS, door control system) carry a 12-month warranty.
(5) Warranty period will count from the ex-factory date of the steam generator.
(6) If the after sales problems are found to be caused by the user's failure to perform regular maintenance on the machine, the warranty will be null and void.
(7) Limited free warranty only includes us providing free spare parts and our remote services; and does not include any other direct or indirect costs / losses.
(8) Limited warranty is offered to all customers. Please provide the maintenance record (Regular descaling records) when you request for warranty services.
(9) Our company has the right to decide whether to repair or to replace a part. Approval must be obtained from our company before shipping back a product. The customer bears transportation fees and any parts fee (when applicable) in advance.
(10) This warranty does not cover any damages, malfunction or failures caused by, or resulting from unauthorized installation, maintenance and repair, improper power supply etc.
(11) Damage caused by accident, misuse of chemical products or any other reasons which are beyond our company's control will not be covered. Any product whose label, nameplate has been removed, altered, damaged is not covered either.
(12) Use in a high salinity or any other extreme corrosive environment is not covered by the warranty.
(13) After the warranty period lapses, support services are still available to our customers when all costs are covered by the customer.
(14) The buyer must report any faults and malfunction of the product immediately or within 14 days of their appearance. The report can be made to the manufacturer, the supplier, or an installation company authorized by the manufacturer. Warranty claims must be made no later than 14 days after the warranty period for the product has expired.
(15) The buyer must take good care of the product. **When receiving the product, the buyer must inspect it for damage caused during transport and storage**. Any damage must be reported to the supplier or the delivery company immediately. The manufacturer is not responsible for any issues, malfunction or defect that are the result of transportation or incorrect storage, installation or use not in accordance with the manufacturer's recommendations, neglect of maintenance, or the placement of product in conditions that do not meet the manufacturer's recommendations.
(16) Please contact our company if you need additional information. Thank you.

Appendix: Specifications of our Special Models

Model	Power KW	Voltage V/current A	Power wire size N*mm^2	Fuse or breaker A
AURA-90	9.0	215-240/41	3*10.0	60
AURA-105	10.5	215-240/48	3*10.0	60
AURA-120	12.0	215-240/55	3*10.0	100

Table 6

NOTICE We do not recommend customers to choose special models. However, we can support customized services or any other requirements - should they have special needs due to space or power-supply constrain.

For more information, please contact us at info@spauna.ee.

MAINTENANCE RECORD (Regular descaling records)