AURA Fast Steam Function Manual

1. Introduction

Commercial mode - fast steam function is specialized for commercial use place like spa center, sauna center, club, etc. Under commercial mode, water tank always keep the water temperature at 80℃, once the customer go into the steam room and press the “fast steam” switch, the steam will come out in 30 seconds, runs 30 minutes, and then it will back to stand by (Heat preservation state).

2. Installations

The fast steam switch should be installed inside the steam room at the height and place where easy to operate.

Step 1: Please follow below figure to open hole and install fast steam switch, then pull the wire through the conduit.

① Panel interlocking ② Size of housing box

③ Fast steam switch panel ④ Open hole size for conduit

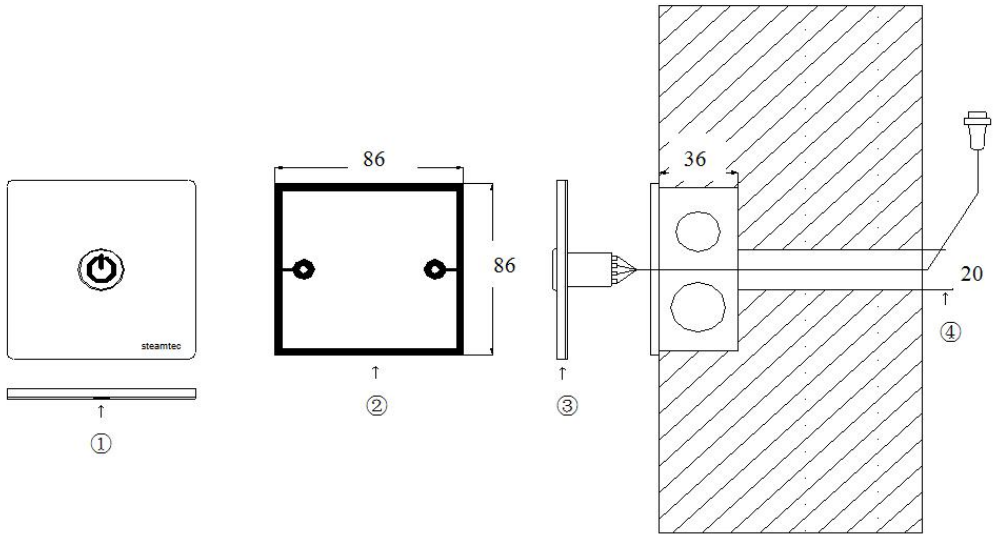

NOTICE Pictures/drawings for illustrative purposes only

Step 2: Connect the cable to the central function box.

Step 3: Open central function box and slide change-over switch to “ON”, see figure 3.



Figure 2

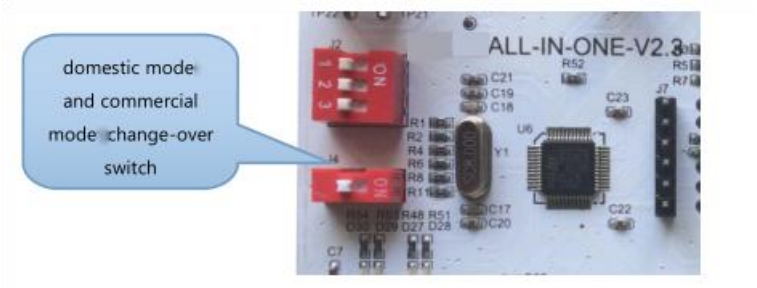

Figure 3

3. Functions And Operations

Commercial model operating principle: when turn on the steam generator by touch the ON/OFF button on the controller, steam generator begins to heat up, and keep the temperature of the water inside the water tank around 80 ℃, this is called the “ stand by” status. When press the fast steam button, steam will comes out in 30 seconds. And after 30 minutes, system itself will back to “ stand by” status again.

Advantages:

A. This design would not only saving consumers’ waiting time, but also saving energy.

B. The 30 minutes auto back to “ stand by” status design would prevent the energy waste caused by if the owner or consumers forgot to turn off the steam generator after the steam bath.

C. The fast steam switch is designed to installed inside the steam room, consumers can turn on it again if want to continue the steam bath while it automatically stopped after 30 minutes.

D. If steam bath time less than 30 minutes, it can be back to “ stand by” status manually by turn off the fast steam switch.

NOTICE Pictures/drawings for illustrative purposes only

Operations:

- Turn on steam generator controller.
- Then turn on “fast steam” switch when needed. The steam generator will go into “commercial mode”, and the controller will show “commercial mode” and the remaining working time. The time is counting backwards from 30 mins to 0 mins, once 30 minutes run out, it will back to stand by (Heat preservation state), and owner or consumers can turn on the “fast steam ” switch again to make the steam come out.



- If you want to change to “Domestic Mode”, please disconnect the general power supply, then open the central function box and slide change-over switch to opposite side of “ON”, see figure 4.

NOTICE Pictures/drawings for illustrative purposes only