SPAUNA - MÕNUSA SELTSKONNA JA HEA TUJU MAALETOOJA.

Add: SPA ja SAUNA salong asub Tartus, Riia 140

Tel +372 51 468 25

Web:www.spauna.ee

Email: Info@spauna.ee

AURA Descaling Pump Manual

Please read the manual carefully before installation and use
Keep the manual for further reference



TABLE OF CONTENT

02 Configuration List

03 Warnings

03 Working Flow, Structure and Parameters

05 nstallations

07 Functions and Operations

10 Maintenance

Configuration List

When you receive the descaling pump,please check what you received according to belowtable please contact us immediately if any missing.

Item code	Item name
1	Base Body, 1pc
2	Descaling bottles, 2pcs
3	1.5m silicone hose with cap tc steam generator, 1pc
4	3m control cable to steam generator centra box, 1pc

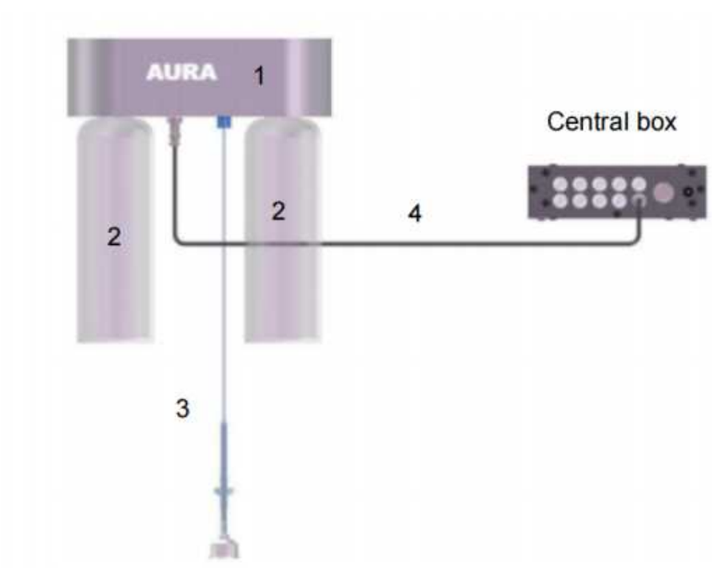

Figure 1

Warnings

⚠ **WARNING:** Water soluble perfume, emulsifier or ethanol with perfume can’ t be used, the device might be damaged by these above solution.

⚠ **WARNING:** Descaling liquid should be away from children. Wash with plenty of water once liquid touch eyes or mouth, go to see doctor if necessary.

Please post above Warnings at obvious position near descaling pump.

Working Flow
Structure and Parameters

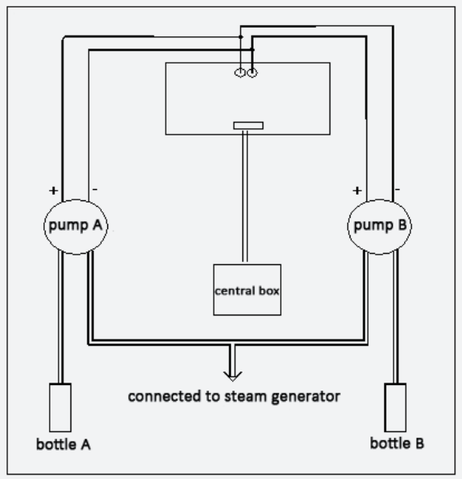

Figure 2

Connection Diagram Inside

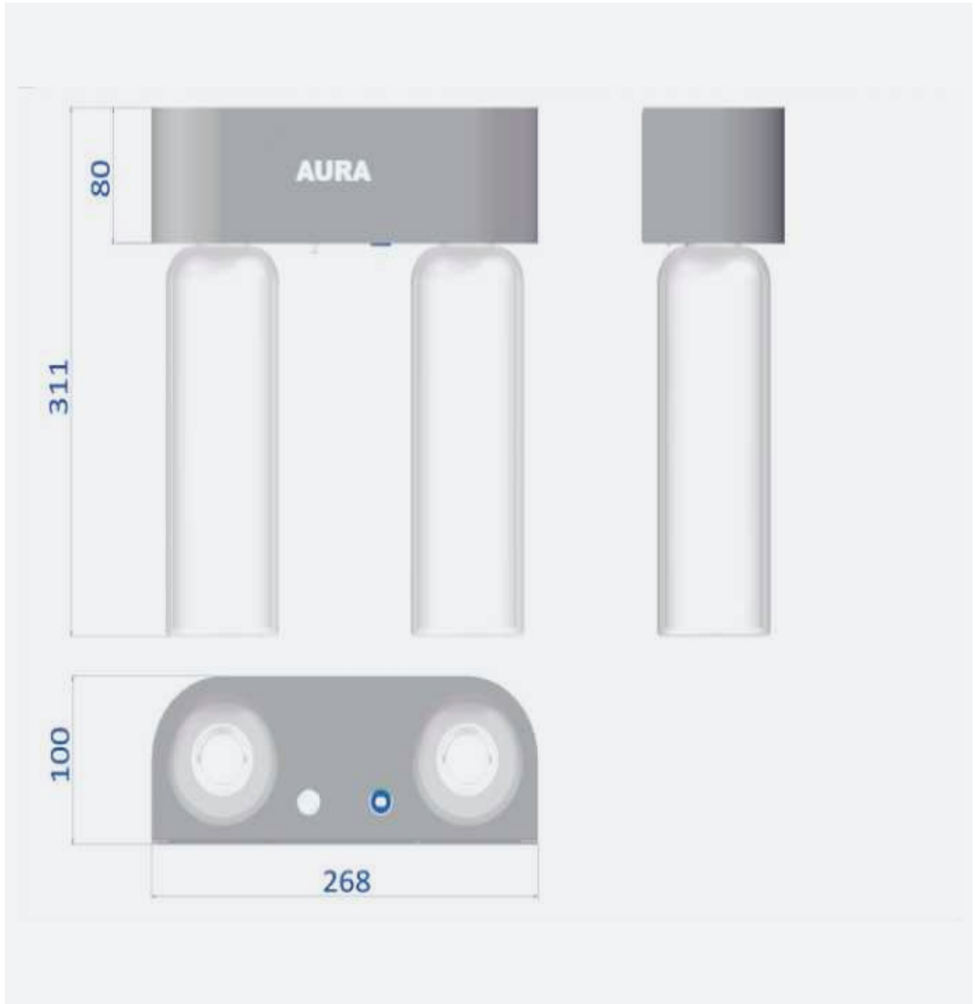

Figure 3

Net Weight: 1.95kg
Motor Voltage: 12VDC
Power: 5W

Installations

Cautions

1. The descaling pump should be installed at the place where it is convenient to do maintenance, check and add descaling iquid.
2. It should be used indoors only, it should be installed at dry and clean places.
3. It can't be nstalled outdoors or placed where it will be frozen.
4. It can't be installed at flammable, corrosive or chemical place.

5. Descaling liquid container should be fixed onto a secure vertical surface.Please hang the descaling pump on 2 screws with a distance of206mm, and 1.5m above the ground.

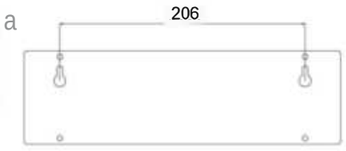

6. It should be nstalled at a specified and isolated room where children can't reach.

Isolate hot source

The descaling pump can’t be installed above or below the steam generator. It is better to keep minimum 0.5 meter between the steam generator and the descaling pump. Insulation materials should be placed between them if the minimum distance can’t be guaranteed.

Connecting hose and wire

Connecting hose and wire according to figure 1 & figure 4.

ATTENTION: Cables and wires can’t touch steam pipes.

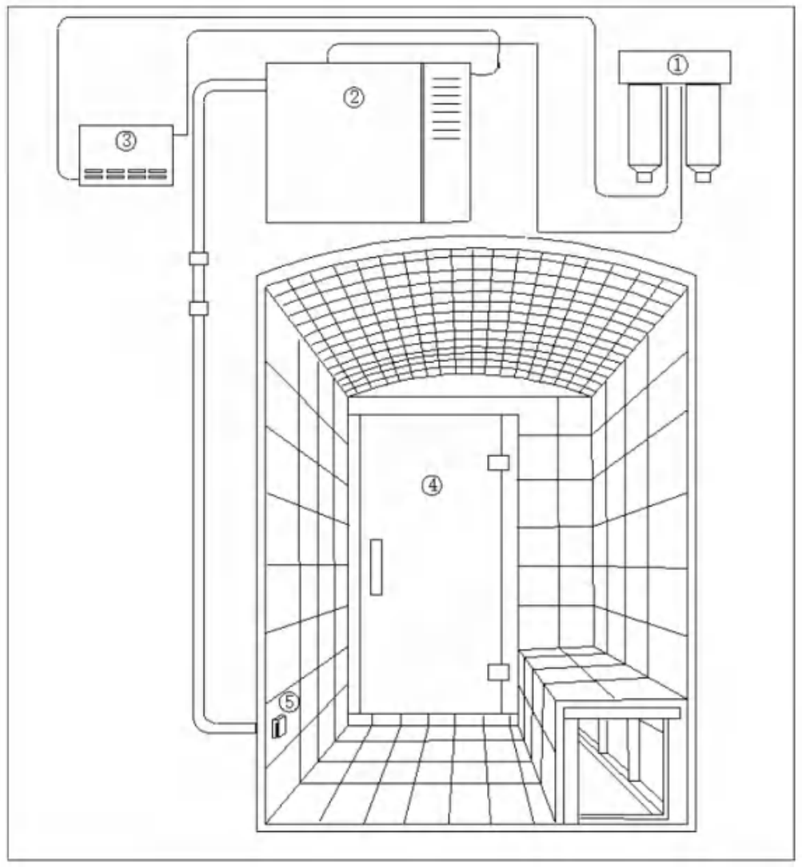

Figure 4

1. Descaling pump
2. Steam generator
3. Steam generator central box
4. Steam room
5. Steam nozzle

The figure4 installation steps and figures are applicable when working with the AURA & AURA PREMIUM steam generator.

Functions and Operations

Usage

- Descaling time can be set only when the steam generator is on.
- Descaling time is from 0~8 hours. “0” means automatically drain immediately, “1~3H” is waiting time, then drain, non descaling function, “4~8H” is descaling mode. Under “4~8H” , after steam generator is off, it will automatically pump descaling liquid into water tank for soaking.
- After adding descaling liquid to the bottles, set working time (4~8 hours) for descaling pump when the steam generator is on. When steam generator is off, it will go into descaling mode .
- For example, if you set 6 hours, it will soak with descaling liquid for 6 hours. When time reaches, steam generator will automatically start to drain, flushing, and then power off.
- If you want to cancel or change the descaling procedure, please do it when the steam generator is on or within 5 mins after the steam generator is off.
- If the machine is set under “4~8H” , then the machine will automatically descale every time after the steam generator turn off, even if the descaling liquid in the bottles runs out. So please check the amount of descaling liquid regularly.

Pump working time:

Shift 1 switch on ----30seconds

Shift 2 switch on ----60seconds

Shift 3 switch on ----90seconds

The factory default setting is shift 1 switch on. You can change according to your need.

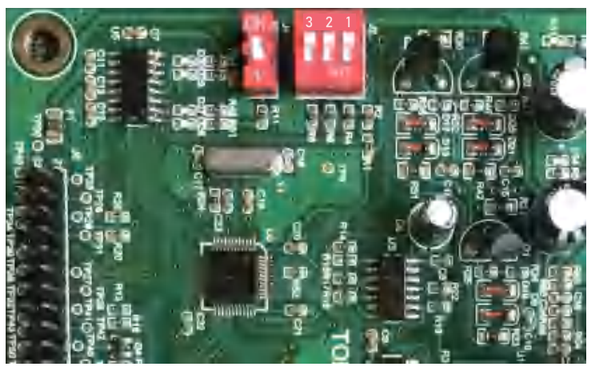

Figure 5

- Notes: The air might exist in the hose, please ignore it, our device could solve this problem itself.
- **How frequently should descaling be done?**

Hardness	PPM	dH	Mg/l
Very soft	0 to 60 ppm	0 to 4 dH	
Soft	60 to 119 ppm	4 to 8 dH	0-19 mg/l
Medium hard	120 to 179 ppm	8 to 12 dH	20-50 mg/l
Hard	180 to 239 ppm	12 to 18 dH	51-120 mg/l
Very hard	240 to 500 ppm	18 to 30 dH	121-174 mg/l
Extremely hard	over 500 ppm	over 30 dH	>175

< 4° dH, very soft water, descaling after 500 hours of use.
> 4° dH, soft water, descaling after 100 hours of use.
> 8° dH, medium hard water, descaling after 50 hours of use.
>12°dH, hard water, descaling after 30 hours of use, installation of a water-softener is recommended
> 18°dH, very hard and extremely hard water, Install a water softener

- **What descaling liquid can be used?**

  Food grade citric acid, for example, descaling liquid for coffee machine. Vinegar or lemon juice also can be used.

- **How much water in the tank to be mixed with acid?**

  3-6KW machine: 3.6L 7.5-12KW machine: 8L 13.5-24KW machine: 12L

- **How much descaling liquid needed each time?**

  3-6KW machine: 44ML each time; (pump working 30 seconds, refer to figure5)

  7-12KW machine: 90ML each time; (pump working 60 seconds, refer to figure 5)

  13.5-24KW machine: 134ML each time (pump working 90 seconds, refer to figure 5)

  Descaling pump glass bottle capacity: 1000ML each bottle, total 2 bottles.

  Attention: The system will begin to pump descaling liquid into tank 5 mins after steam generator is turned off.

  Please check the amount of descaling liquid regularly.

Operation on controller

The operation may vary slightly depending on the different steam generator controllers. Here is an example using the AIO controller for illustration.

Set it on AIO steam generator controller. Press SET ○ until  appears, then press △ ○ up or ○ ▽ down to adjust time, then press SET ○ .

Controller

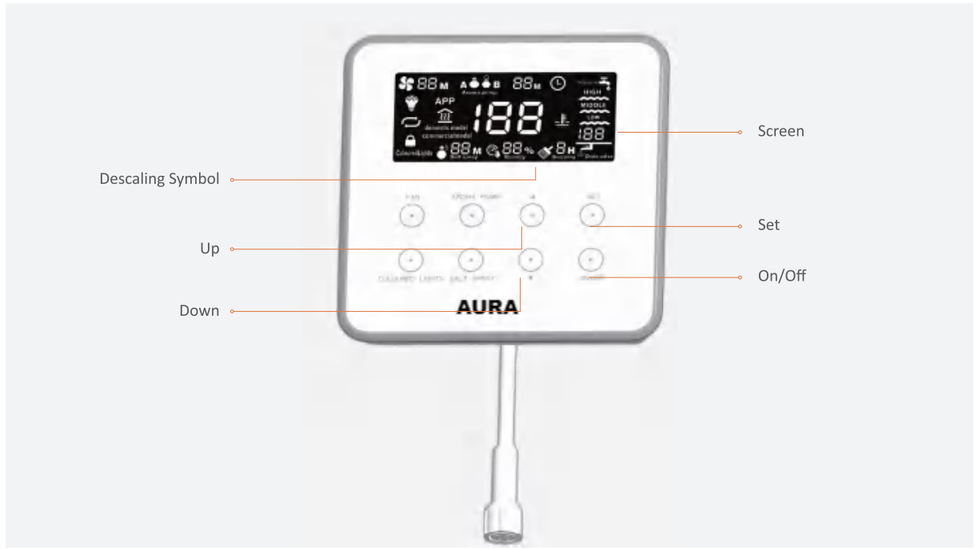

Figure 6

Setting on APP

You can also set descaling time on app, for more details, please refer to APP manual.

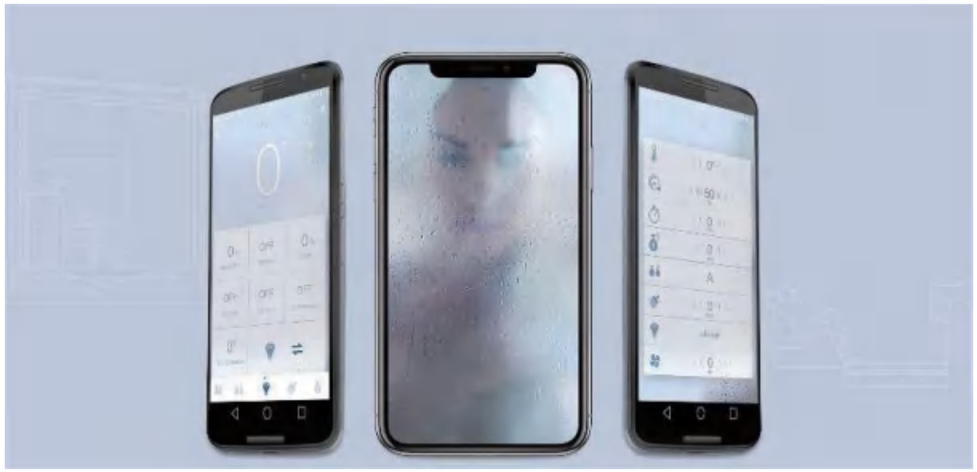

Figure 8

Maintenance

If solution can’t be injected into steam generator, please:

1. Inspect the liquid level of solution container.
2. Inspect if the pump can work normally.
3. Inspect if the hose is broken.
4. Inspect the straw and delivery hose if they are bending, tied or broken, if yes, please better straighten them or change them.